EBARA

Ahead Beyond

EBARA MODEL:CNPAx NFPA20 UL/FM* HSC FIRE PUMPS

PUMPSET DATA INFORMATIONS BOOK

CNPAx SINGLE/MULTI STAGE

ELECTRIC MOTOR & DIESEL ENGING DRIVEN
FIRE-FIGHTING PUMP SYSTEM

* FM certification is expected to be obtained in the first half of 2025

HISTORY OF EBARA

Over a century of challenges and continuous innovation.

With the goal of providing excellent products based on the spiral pump theory of world-renowned Dr. Ariya Inokuty,
EBARA's founder—Issey Hatakeyama—founded the Inokuty Type Machinery Office in 1912.
In 1920, the company's name was changed, and EBARA CORPORATION was born.
Since then, the EBARA Group has dedicated itself to discovering new ways to create a better world for the future.

1910s

- 1912 Inokuty Type Machinery Office founded
- 1915 Order for record-breaking large-scale pump at Tokyo 's Asakusa Tamachi pump station 1

Tokyo's Asakusa Tamachi pump station

1920s

- 1920 EBARA CORPORATION established
- 1921 First blower (a centrifugal blower) manufactured
- 1924 Japan 's first axial pump manufactured 2
- 1925 EBARA lends its talents to domestic production of water pumps 3

Axial pump
(400 mm diameter)

Water pumps

1930s

- 1930 Japan 's first centrifugal chiller produced 4
- 1931 Japan 's first quick water filtration device produced

Centrifugal chillers

1910 1920 1930 1940 1950 1960 1970 1980

1950s

- 1955 Standard pump business begins following standardization and mass production of small size pumps

1960s

- 1961 Entered the waste treatment business with delivery of the first stoker-type waste incinerator
- 1965 Fujisawa Plant opened as the first facility in Japan to mass-produce standard pumps 5

Fujisawa Plant upon completion

1970s

- 1975 Sodegaura Plant is established with the goal of expanding EBARA 's compressor and turbine business
- 1978 First fluidized-bed incinerator designed for municipal waste delivered
- 1979 Seawater desalination plant pump delivered to Jubail, Saudi Arabia 6

Seawater desalination pump for Saudi Arabia

1980s

- 1985 New projects initiated in the semiconductor industry with the start of the precision machinery business
- 1986 First roots-type dry vacuum pumps delivered
- 1989 First internally circulating fluidized-bed boiler (ICFB) delivered

History Of EBARA

1990s

- 1990 First bump plating device delivered
- 1992 First CMP system delivered

2000s

- 2008 Number of cumulative standard pumps produced at the Fujisawa Plant reaches 15 million
- 2009 World's most advanced ultra-high-efficiency centrifugal chillers released 7

Centrifugal chillers

1990 2000 2010

Ahead > Beyond

2010s

- 2010 Futtsu Plant established, taking over transferred functions of the Haneda Plant
- 2012 100th anniversary celebration
- 2014 New CMP system announced
- 2015 One of the world's largest high-pressure pumps delivered to a seawater desalination plant in San Diego, USA
- 2016 New dry vacuum pump for the semiconductor industry launched
- 2017 Submersible motor pump with one of the world's highest output capability delivered to a pumping station delivering public water to Las Vegas, USA 8
- 2018 Number of cumulative dry vacuum pumps delivered from the Fujisawa Plant reaches 150 thousands 9

Las Vegas underwater motor pump

Sales of 150 thousands dry vacuum pumps

Group Network

Affiliated Companies

[Fluid Machinery and Systems Company]

EBARA DENSAN LTD.
EBARA FAN & BLOWER CO., LTD.
Ebara Byron Jackson Co., Ltd.
E-Square Co., Ltd.
EBARA REFRIGERATION EQUIPMENT & SYSTEMS CO., LTD.
Elliott Group Holdings, Inc.
Elliott Ebara Turbomachinery Corporation
EBARA REFRIGERATION EQUIPMENT&SYSTEMS(CHINA)CO.,LTD.
EBARA BOMBAS AMÉRICA DO SUL LTDA.
EBARA VIETNAM PUMP COMPANY LIMITED
EBARA PUMPS EUROPE S.p.A.
EBARA PUMPS IBERIA, S.A.
SUMOTO s.r.l.
Ebara-Densan Taiwan Manufacturing Co., Ltd.
EBARA PUMPS PHILIPPINES, INC.
EBARA ENGINEERING SINGAPORE PTE. LTD.
PT. EBARA INDONESIA
EBARA (THAILAND) LIMITED
Ebara Machinery (China) Co., Ltd.
Ebara Pumps Malaysia Sdn. Bhd.
EBARA GREAT PUMPS CO., LTD.
EBARA PUMPS MIDDLE EAST FZE.
EBARA INTERNATIONAL CORPORATION
ELLIOTT COMPANY
EBARA DENSAN (KUNSHAN) CO., LTD
EBARA DENSAN (SAMOA) MFG. CO., LTD.
EBARA MACHINERY ZIBO CO., LTD.
Ebara Pompy Polska sp. z o.o.
HOOD-EIC, LLC
EBARA Pumps RUS Limited Liability Company
EBARA PUMPS SOUTH AFRICA (PTY) LTD
EBARA PUMPS AMERICAS CORPORATION
Ebara Thermal Systems (Thailand) Co.,Ltd.
EBARA PUMPS AUSTRALIA PTY. LTD.
EBARA DENSAN (QINGDAO) TECHNOLOGY CO., LTD.
EBARA FLUID MACHINERY KOREA CO., LTD.
PT. Ebara Turbomachinery Services Indonesia
EBARA PUMPS SAUDI ARABIA LLC
EBARA BOMBAS COLOMBIA S.A.S.
EBARA MACHINERY INDIA PRIVATE LIMITED

[Environmental Engineering Company]

Ebara Environmental Plant Co., Ltd.
Chubu Recycle Co., Ltd.
Swing Corporation
EBARA QINGDAO CO., LTD.

[Precision Machinery Company]

EBARA FIELD TECH. CORPORATION
EBARA Precision Machinery Europe GmbH
EBARA PRECISION MACHINERY KOREA INCORPORATED
Ebara Precision Machinery Taiwan Incorporated
SHANGHAI EBARA PRECISION MACHINERY CO., LTD.
EBARA TECHNOLOGIES INCORPORATED

[Administrative Subsidiaries]

EBARA AGENCY CO., LTD.
Ebara Shohnan Sports Center Inc.
EBARA MEISTER CO., LTD.
ECE Co., Ltd.
EBARA EARNEST Co., Ltd.
Ebara America Corporation

NFPA 20 - STANDARD FOR THE INSTALLATION OF STATIONARY PUMPS FOR FIRE PROTECTION

FIRE PUMPS

Fire Pumps are used to supply water for automatic sprinkler systems, standpipes or fire hydrants.
NFPA 20 classifies fire pumps as split case, vertical turbine, end suction or In-Line design.
All fire pumps are rated at 40 psi or more of boost.
Fire Pumps of the type described shall meet the following basic requirements:
1. Each pump is to be tested hydrostatically for not less than 5 minutes. The test pressure is to be not less than 1.5 times the maximum working pressure of the pump, but in no case less than 250 psi (1724 kPa).

2. A pump shall develop not less than 65 percent of rated total head when discharging at 1.5 times rated capacity. The maximum net pressure for a fire pump shall not exceed 140 percent of rated head.

3. The maximum pump brake horsepower shall not exceed the HP rating its driver, including service factor.

CONTROLLERS

Listed below are NFPA 20 minimum requirements for fire pump controllers:

MOTOR CONTROLLERS:

The motor control panel equipment shall be factory assembled, wired, tested, and specifically approved for fire pump service. Combined manual and automatic type to incorporate the following:
a. Isolating switch
b. Externally operable, quick breaking disconnect
c. Time delay Locked Rotor Over current protection set at 600% of motor full load current for 20 seconds
d. Pressure switch with high and low pressure setting
e. Motor Starter of the magnetic type
f. Pilot lamp to indicate circuit breaker closed and power available
g. Phase Reversal visible indicator pilot lamp

ENGINE CONTROLLERS:

Automatic engine controllers shall be assembled, wired assembled at the factory and specifically approved for fire pump service.
The following minimum features shall be incorporated:
a. Pilot lamps to indicate controller in automatic position
b. Alarm bell and pilot lamp to indicate low oil pressure, high jacket water temp, failure to start, shutdown for over speed, battery failure and battery charger failure
c. Pressure recorder
d. Battery charger
e. Pressure switch with high and low settings
f. Weekly Test Timer
Most control panels now supplied are manual stop.
Automatic shutdown upon cancellation of all start signals can be supplied as an option.
Engine controllers are supplied with as standard, equipment contacts to operate auxiliary equipment such as remote alarms, louvers etc.

DRIVERS

MOTORS:

NFPA 20 requires all fire pump motor drives to be rated for continuous duty and shall not be used at voltages in excess of 110% of rated voltage. At rated voltage and frequency, the full load ampere rating shall not be exceed (except as allowed by the service factor on motor nameplate)under any pumping condition.

ENGINES:

NFPA 20 requires that the engine shall have HP rating listed by a testing laboratories, (UL/FM) or be not less than 10% greater than the maximum brake HP required by the pump.
A deduction of 3% of the power shall be made for each 1000 feet rise in altitude above 300 ft. and 1% for each 10 degrees F. Above 77 degrees F. Ambient temp.
Minimum instrumentation and control shall include: adjustable speed governor, over speed shutdown device set approx. 20% above rated engine speed, tachometer with hour meter, oil pressure gauge and temperature gauge.

JOCKEY PUMPS

Jockey Pumps are used when it is desirable to maintain a uniform pressure on the fire system. Normally they are supplied at a capacity of 1% main pump and at a pressure slightly above design pressure. A centrifugal type is preferred, but a turbine vane pump or a positive displacement pump can be used. Where these latter types are used, a suitable relief valve shall be installed to prevent damage to the fire system.

The contents of this publication must not be regarded as binding. EBARA ENGINEERING SINGAPORE PTE. LTD. reserves the right to effect any modification it deems necessary, without prior notice.

CNPAx - Feature Applications

CNPAx SINGLE-STAGE HSC CENTRIFUGAL FIRE PUMPSET FEATURE

PROTECTION APPLICATIONS

COMMERCIAL FIRE FIGHTING	INDUSTRIAL FIRE FIGHTING
Airports, Metro Stations, Museum, Hotels, Hospitals, Schools, Shopping Malls, Warehouses & etc.	Industrial enterprises, Petrochemical, Power Plant & etc.

RANGE OF RATED CERTIFIED PARAMETER FOR SINGLE-STAGE HSC FIRE PUMP

FLOW CAPACITY(usgpm):						
300	400	450	500	750	1000	1250
1500	2000	2500	3000	3500	4000	4500
5000	5500	6000	6500	7000	7500	8000
PRESSURE HEAD(psi): 40 to 367						

DRIVER SPEED(rpm):
50Hz, 2/4 Pole Speed Electric Motor: 3000/1500 Diesel Engine: 3000
60Hz, 2/4 Pole Speed Electric Motor: 3600/1800 Diesel Engine: 1800
Other Speed Diesel Engine: 2000/2100/2350/2600

VOLUTE CASING
- radial loads on impeller & shafting are reduce with the double volute design which could also prolong the bearing life
- user friendly & self-aligning make easy removal/installation for upper casing
- heavy duty casing and 250psi flange rating design for the high working pressure application
- efficiencies and NPSH is improved with the aid of CFD analysis & optimum design

CASING WEAR RING
- Stationary on the casing
- Provide close running clearance minimizes pressure leakage between suction and discharge chambers of the casing
- maximizes efficiency
- Easily replaceable

REVOLVING PUMP SHAFT MODULE
- clockwise rotation is for both engine & motor driver, counter-clockwise rotation is possible for motor driver with similar components.
- minimum stocking of service components made possible due to the modular design which maximizes sharing of common parts
- double suction cast sus304 stainless steel impeller
- better corrosion prevention with the sus304 steel for shaft sleeves and gland packing module
- non fluid submerged design of shaft sleeve nut at far-side of fluid compartment could provide easy service access

BEARING UNITS
- both bearing at CP/CCP side can be easily maintained/replaced without completely disassembly the pump
- 6300 series single row deep groove ball bearings are simple, versatile and robust design, low friction high-speed capability accommodate radial and axial loads in both directions and require little maintenance
- grease purging lubrication feature according to the design specification is a practice of forcing grease completely through the bearing housing and bearing until old grease is removed and new grease shows at the grease relief plug

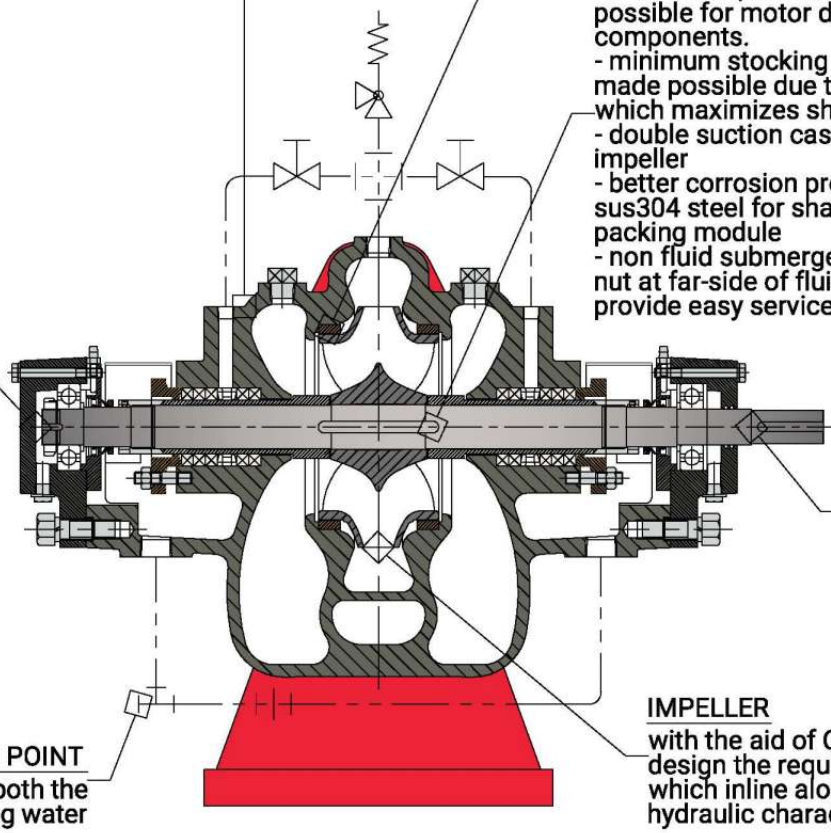

PUMP SHAFT MODULE
- heavy duty quenched & tempered high chrome steel
- precision-machined and balanced to reduce vibration
- replaceable shaft protecting sleeves
- short distance between shaft bearing support at CP/CCP side

DRAIN SUM POINT
Centralised drain point for both the CP/CCP side stuffing box cooling water

IMPELLER
with the aid of CFD analysis & optimum design the required BHP is the lowest which inline along the excellent hydraulic characteristics of the impeller

The contents of this publication must not be regarded as binding. EBARA ENGINEERING SINGAPORE PTE. LTD. reserves the right to effect any modification it deems necessary, without prior notice.

SECTIONAL VIEW - CNPAX

SINGLE STAGE DOUBLE SUCTION HORIZONTAL SPLIT CASE CENTRIFUGAL FIRE PUMP

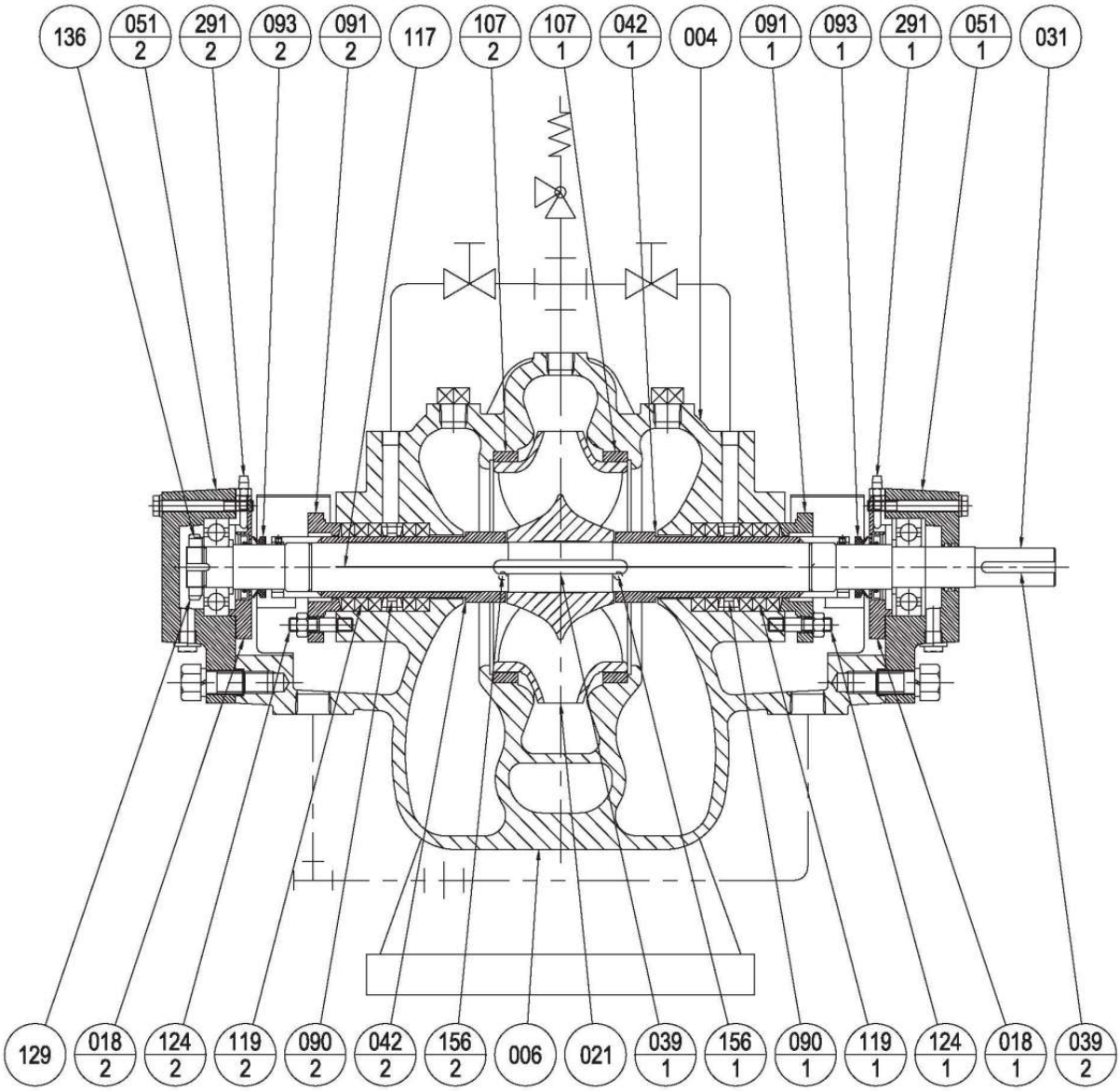

No.	Part Name	Material	Qty	No.	Part Name	Material	Qty
091-1	Gland (CP side)	Bronze	1	291	Grease Nipple	Steel	2
090-2	Lantern Ring (CCP side)	Stainless Steel / Duplex Stainless Steel	1	156-2	Lock Pin, Case Wearing (CCP side)	Stainless Steel / Duplex Stainless Steel	1
090-1	Lantern Ring (CP side)	Stainless Steel / Duplex Stainless Steel	1	156-1	Lock Pin, Case Wearing (CP side)	Stainless Steel / Duplex Stainless Steel	1
051-2	Bearing Cover (CCP side)	Cast Iron	1	136	Bearing Lock Washer	Steel	1
051-1	Bearing Cover (CP side)	Cast Iron	1	129	Bearing Lock Nut	Steel	1
042-2	Shaft Sleeve (CCP side)	Stainless Steel / Duplex Stainless Steel	1	124-2	Gland bolt & Nut (CCP side)	Stainless Steel / Duplex Stainless Steel	2
042-1	Shaft Sleeve (CP side)	Stainless Steel / Duplex Stainless Steel	1	124-1	Gland bolt & Nut (CP side)	Stainless Steel / Duplex Stainless Steel	2
039-2	Coupling Key	Stainless Steel / Duplex Stainless Steel	1	119-2	Gland Packing (CCP side)	Set(6 Rings)Teflon	1
039-1	Impeller Key	Stainless Steel / Duplex Stainless Steel	1	119-1	Gland Packing (CP side)	Set(6 Rings)Teflon	1
031	Shaft	Stainless Steel / Duplex Stainless Steel	1	117	Casing Gasket	Fiber	1
021	Impeller	Ductile Cast Iron / Duplex Stainless Steel	1	107-2	Casing Wearing (CCP side)	Bronze	1
018-2	Bearing Support (CCP side)	Ductile Cast Iron / Duplex Stainless Steel	1	107-1	Casing Wearing (CP side)	Bronze	1
018-1	Bearing Support (CP side)	Ductile Cast Iron / Duplex Stainless Steel	1	093-2	Deflector (CCP side)	Rubber	1
006	Casing Lower Half	Ductile Cast Iron / Duplex Stainless Steel	1	093-1	Deflector (CP side)	Rubber	1
004	Casing Upper Half	Ductile Cast Iron / Duplex Stainless Steel	1	091-2	Gland (CCP side)	Bronze	1

The contents of this publication must not be regarded as binding. EBARA ENGINEERING SINGAPORE PTE. LTD. reserves the right to effect any modification it deems necessary, without prior notice.

CNPAx - Feature Applications

CNPAx MULTI-STAGE HSC CENTRIFUGAL FIRE PUMPSET FEATURE

PROTECTION APPLICATIONS

COMMERCIAL FIRE FIGHTING	INDUSTRIAL FIRE FIGHTING
Airports, Metro Stations, Museum, Hotels, Hospitals, Schools, Shopping Malls, Warehouses & etc.	Industrial enterprises, Petrochemical, Power Plant & etc.

RANGE OF RATED CERTIFIED PARAMETER FOR MULTI-STAGE HSC FIRE PUMP

FLOW CAPACITY(usgpm):				
500	750	1000	1250	1500
PRESSURE HEAD(psi): 236 to 616				

DRIVER SPEED(rpm):
50Hz, 2 Pole Speed Electric Motor: 3000 Diesel Engine: 3000
60Hz, 2/4 Pole Speed Electric Motor: 3600/1800 Diesel Engine: 1800

TWO STAGE VOLUTE CASING
- radial loads on impeller & shafting are reduce with the double volute design which could also prolong the bearing life
- user friendly & self-aligning make easy removal/installation for upper casing
- heavy duty casing and 250psi flange rating design for the high working pressure application
- efficiencies and NPSH is improved with the aid of CFD analysis & optimum design

CASING WEAR RING
- Stationary on the casing
- Provide close running clearance minimizes pressure leakage between suction and discharge chambers of the casing
- maximizes efficiency
- Easily replaceable

BEARING UNITS
- both bearing at CP/CCP side can be easily maintained/replaced without completely disassembly the pump
- 6300 series single row deep groove ball bearings are simple, versatile and robust design, low friction high-speed capability accommodate radial and axial loads in both directions and require little maintenance
- grease purging lubrication feature according to the design specification is a practice of forcing grease completely through the bearing housing and bearing until old grease is removed and new grease shows at the grease relief plug

REVOLVING PUMP SHAFT MODULE
- clockwise rotation is for both engine & motor driver, counter-clockwise rotation is possible for motor driver with similar components.
- minimum stocking of service components made possible due to the modular design which maximizes sharing of common parts
- double suction cast sus304 stainless steel impeller
- better corrosion prevention with the sus304 steel for shaft sleeves and gland packing module
- non fluid submerged design of shaft sleeve nut at far-side of fluid compartment could provide easy service access

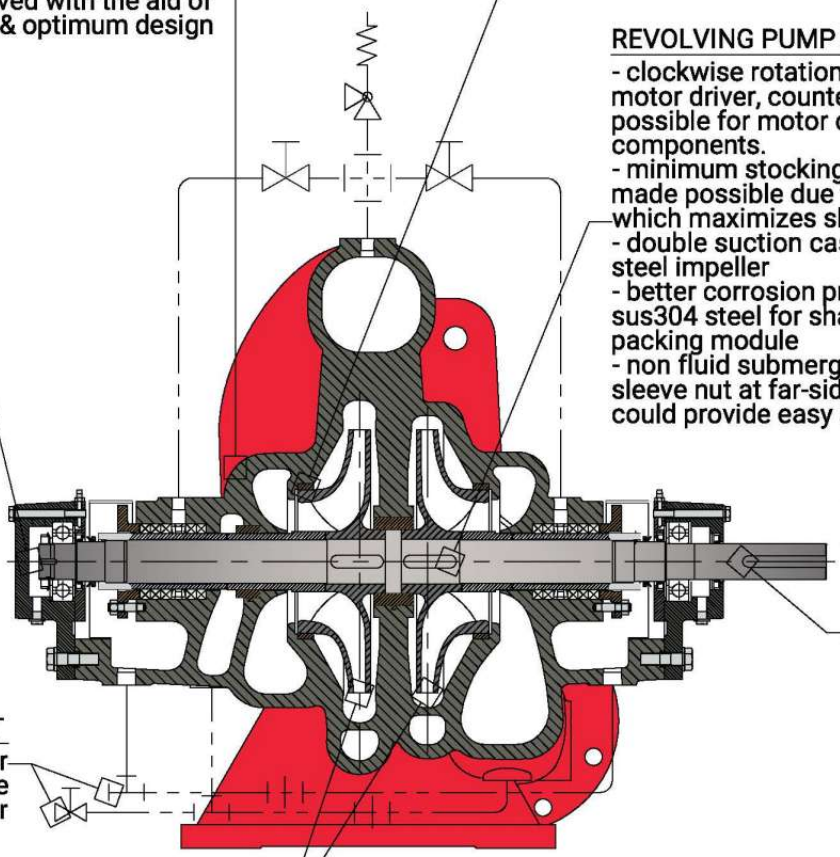

PUMP SHAFT MODULE
- heavy duty quenched & tempered high chrome steel
- precision-machined and balanced to reduce vibration
- replaceable shaft protecting sleeves
- short distance between shaft bearing support at CP/CCP side

DRAIN SUM POINT
Centralised drain point for both the CP/CCP side stuffing box cooling water

BACK-TO-BACK IMPELLER
with the aid of CFD analysis & optimum design the required BHP is the lowest which inline along the excellent hydraulic characteristics of the impeller

The contents of this publication must not be regarded as binding. EBARA ENGINEERING SINGAPORE PTE. LTD. reserves the right to effect any modification it deems necessary, without prior notice.

SECTIONAL VIEW - CNPAx

MULTI STAGE DOUBLE SUCTION HORIZONTAL SPLIT CASE CENTRIFUGAL FIRE PUMP

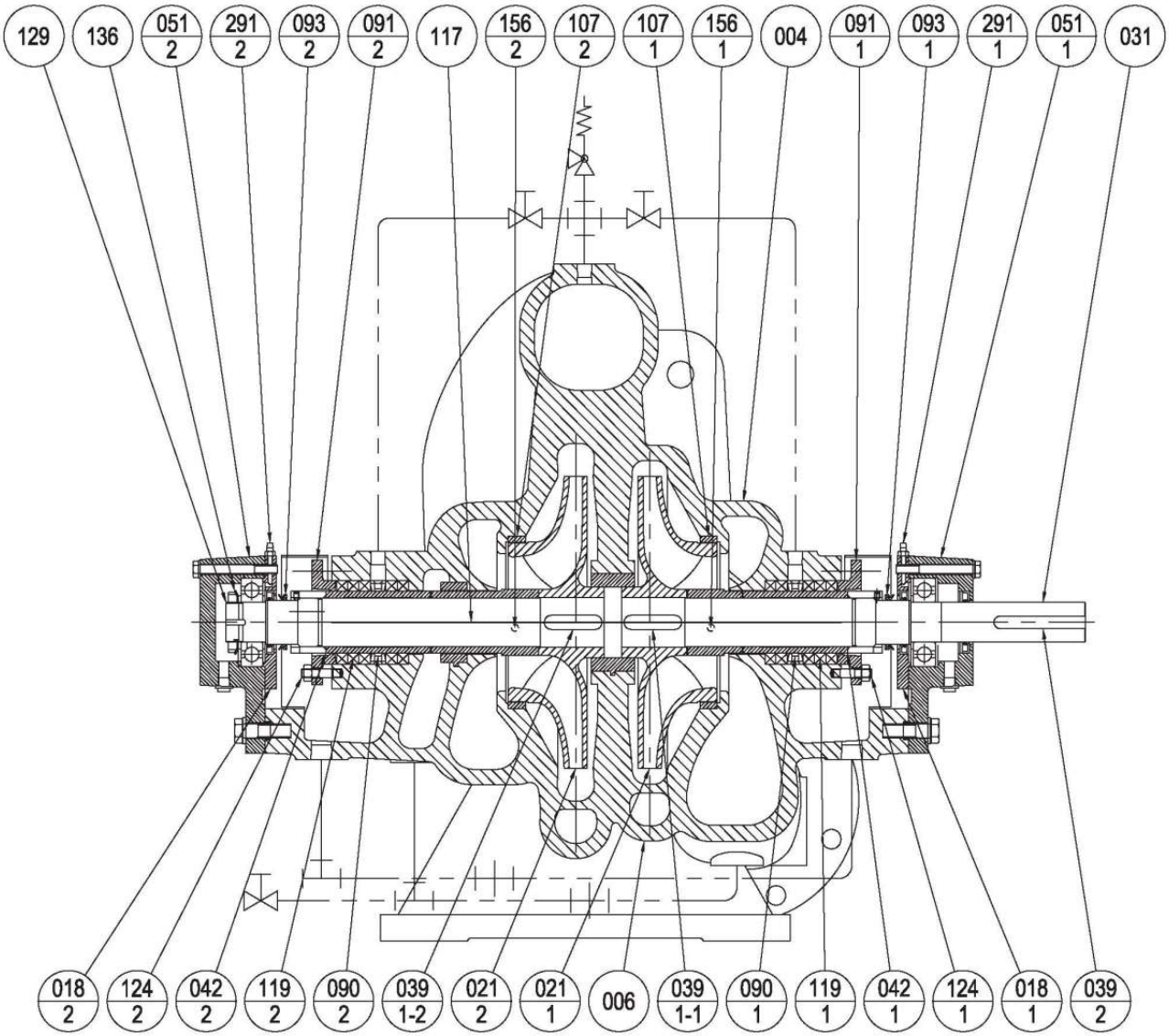

No.	Part Name	Material	Qty	No.	Part Name	Material	Qty
090-2	Lantern Ring (CCP side)	Stainless Steel / Duplex Stainless Steel	1	291	Grease Nipple	Steel	2
090-1	Lantern Ring (CP side)	Stainless Steel / Duplex Stainless Steel	1	156-2	Lock Pin, Case Wearing (CCP side)	Stainless Steel / Duplex Stainless Steel	1
051-2	Bearing Cover (CCP side)	Cast Iron	1	156-1	Lock Pin, Case Wearing (CP side)	Stainless Steel / Duplex Stainless Steel	1
051-1	Bearing Cover (CP side)	Cast Iron	1	136	Bearing Lock Washer	Steel	1
042-2	Shaft Sleeve (CCP side)	Stainless Steel / Duplex Stainless Steel	1	129	Bearing Lock Nut	Steel	1
042-1	Shaft Sleeve (CP side)	Stainless Steel / Duplex Stainless Steel	1	124-2	Gland bolt & Nut (CCP side)	Stainless Steel / Duplex Stainless Steel	2
039-2	Coupling Key	Stainless Steel / Duplex Stainless Steel	1	124-1	Gland bolt & Nut (CP side)	Stainless Steel / Duplex Stainless Steel	2
039-1-2	Impeller Key (CCP side)	Stainless Steel / Duplex Stainless Steel	1	119-2	Gland Packing (CCP side)	Set(6 Rings)Teflon	1
039-1-1	Impeller Key (CP side)	Stainless Steel / Duplex Stainless Steel	1	119-1	Gland Packing (CP side)	Set(6 Rings)Teflon	1
031	Shaft	Stainless Steel / Duplex Stainless Steel	1	117	Casing Gasket	Fiber	1
021-2	Impeller (CCP side)	Stainless Steel / Duplex Stainless Steel	1	107-2	Casing Wearing (CCP side)	Bronze	1
021-1	Impeller (CP side)	Stainless Steel / Duplex Stainless Steel	1	107-1	Casing Wearing (CP side)	Bronze	1
018-2	Bearing Support (CCP side)	Ductile Cast Iron / Duplex Stainless Steel	1	093-2	Deflector (CCP side)	Rubber	1
018-1	Bearing Support (CP side)	Ductile Cast Iron / Duplex Stainless Steel	1	093-1	Deflector (CP side)	Rubber	1
006	Casing Lower Half	Ductile Cast Iron / Duplex Stainless Steel	1	091-2	Gland (CCP side)	Bronze	1
004	Casing Upper Half	Ductile Cast Iron / Duplex Stainless Steel	1	091-1	Gland (CP side)	Bronze	1

The contents of this publication must not be regarded as binding. EBARA ENGINEERING SINGAPORE PTE. LTD. reserves the right to effect any modification it deems necessary, without prior notice.

SINGLE STAGE DOUBLE SUCTION HORIZONTAL SPLIT CASE CENTRIFUGAL UL LISTED/FM APPROVED FIRE PUMPS SELECTION CHART FOR 50 HZ 2/4 POLE SPEED ELECTRIC MOTOR & DIESEL ENGINE DRIVER

UL LISTED

FM APPROVED

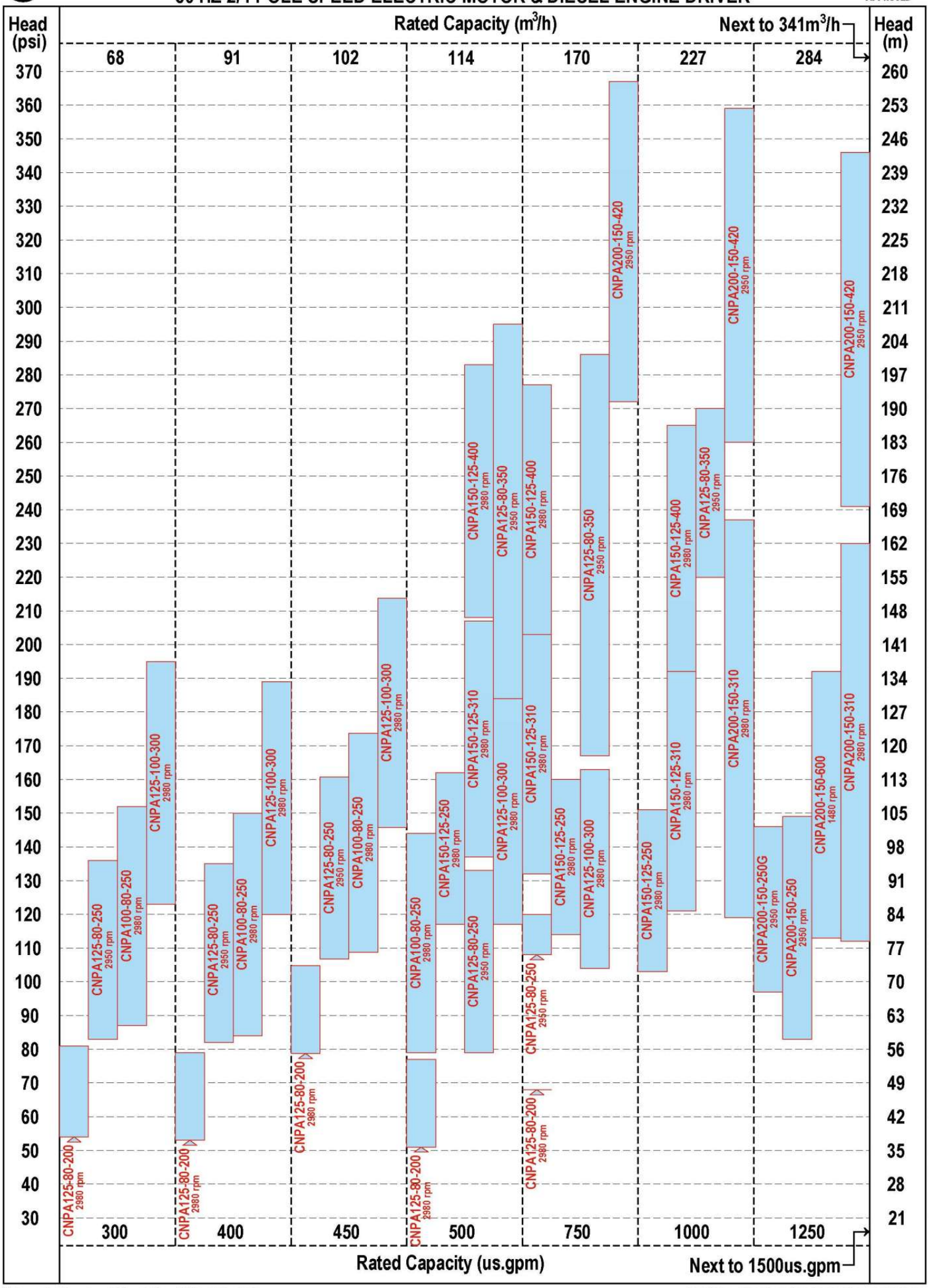

The contents of this publication must not be regarded as binding. EBARA ENGINEERING SINGAPORE PTE. LTD. reserves the right to effect any modification it deems necessary, without prior notice.

SINGLE STAGE DOUBLE SUCTION HORIZONTAL SPLIT CASE CENTRIFUGAL UL LISTED/FM APPROVED FIRE PUMPS SELECTION CHART FOR 50 HZ 2/4 POLE SPEED ELECTRIC MOTOR & DIESEL ENGINE DRIVER

UL LISTED

FM APPROVED

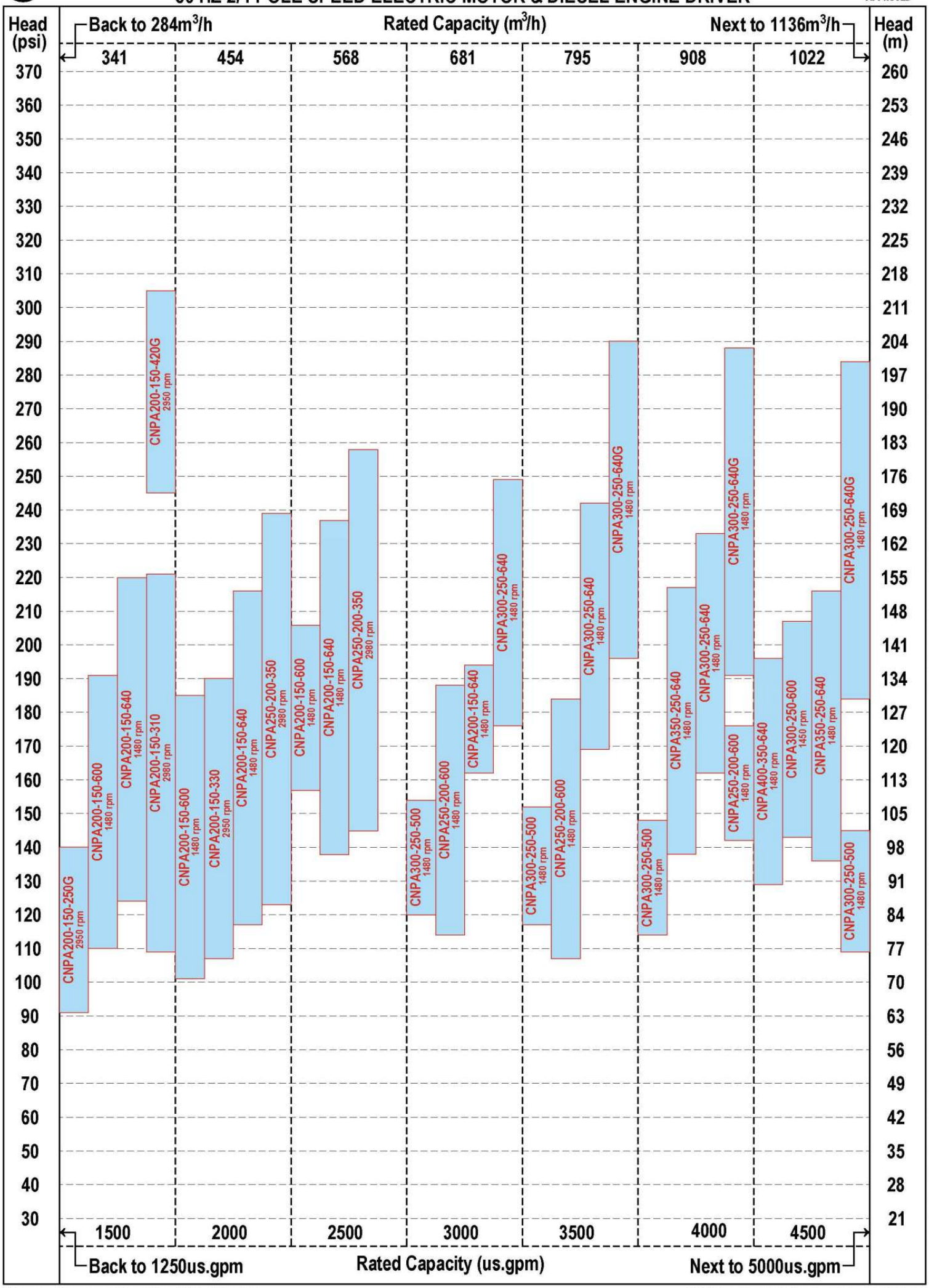

The contents of this publication must not be regarded as binding. EBARA ENGINEERING SINGAPORE PTE. LTD. reserves the right to effect any modification it deems necessary, without prior notice.

SINGLE STAGE DOUBLE SUCTION HORIZONTAL SPLIT CASE CENTRIFUGAL UL LISTED/FM APPROVED FIRE PUMPS SELECTION CHART FOR 50 HZ 2/4 POLE SPEED ELECTRIC MOTOR & DIESEL ENGINE DRIVER

UL LISTED

FM APPROVED

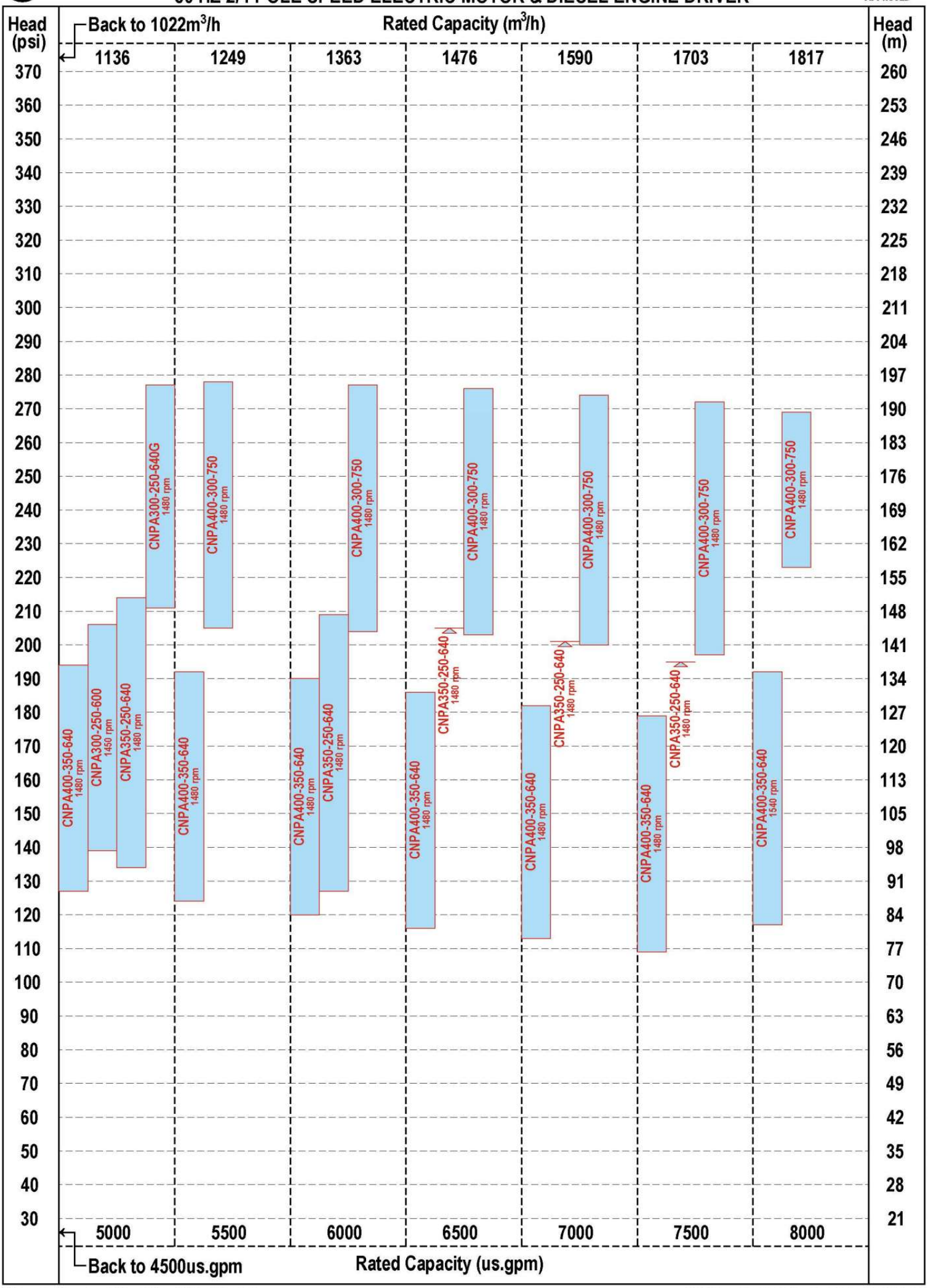

The contents of this publication must not be regarded as binding. EBARA ENGINEERING SINGAPORE PTE. LTD. reserves the right to effect any modification it deems necessary, without prior notice.

SINGLE STAGE DOUBLE SUCTION HORIZONTAL SPLIT CASE CENTRIFUGAL UL LISTED/FM APPROVED FIRE PUMPS SELECTION CHART FOR 60 HZ 2/4 POLE SPEED ELECTRIC MOTOR & DIESEL ENGINE DRIVER

UL LISTED

FM APPROVED

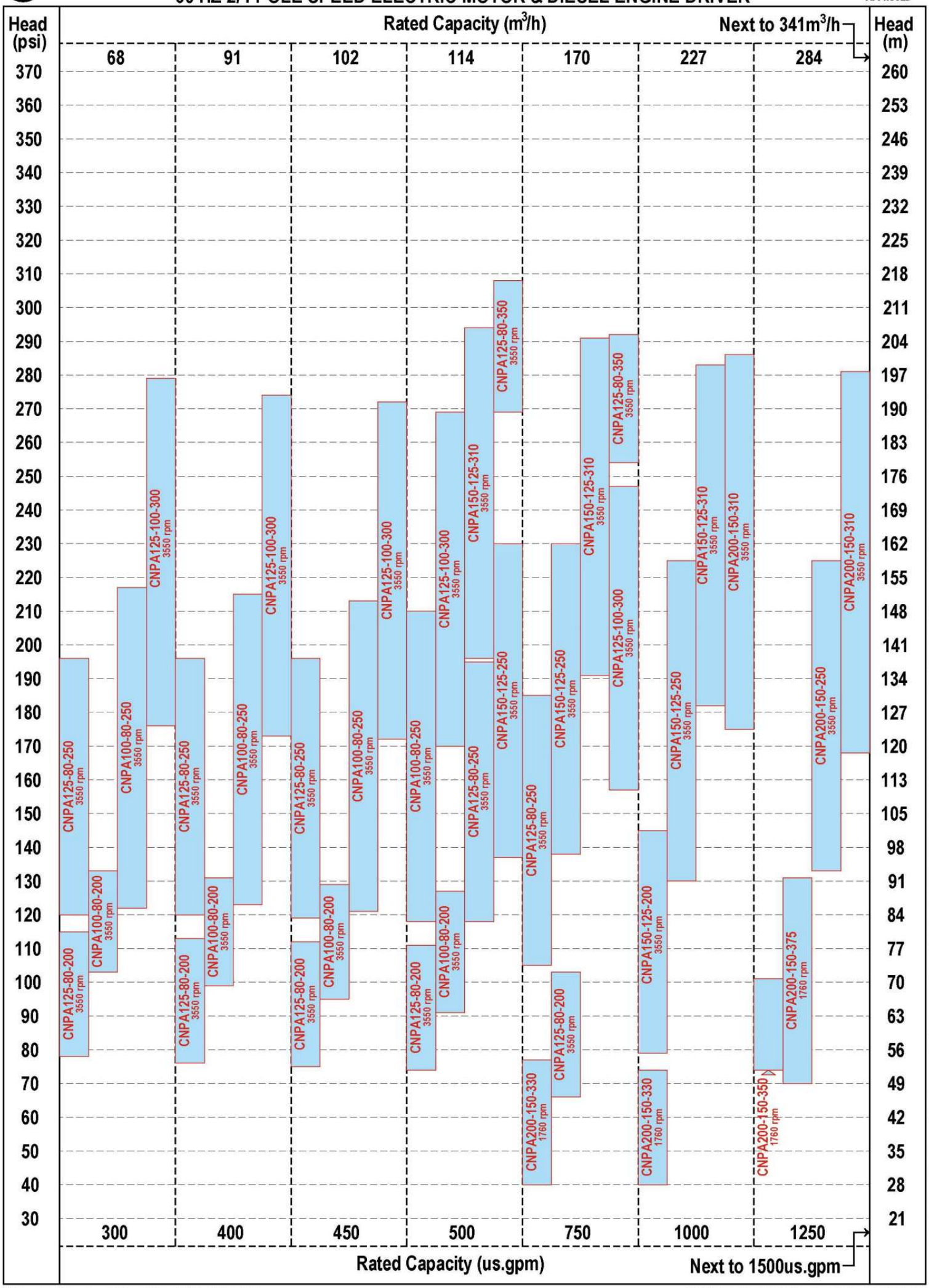

The contents of this publication must not be regarded as binding. EBARA ENGINEERING SINGAPORE PTE. LTD. reserves the right to effect any modification it deems necessary, without prior notice.

SINGLE STAGE DOUBLE SUCTION HORIZONTAL SPLIT CASE CENTRIFUGAL UL LISTED/FM APPROVED FIRE PUMPS SELECTION CHART FOR 60 HZ 2/4 POLE SPEED ELECTRIC MOTOR & DIESEL ENGINE DRIVER

UL LISTED

FM APPROVED

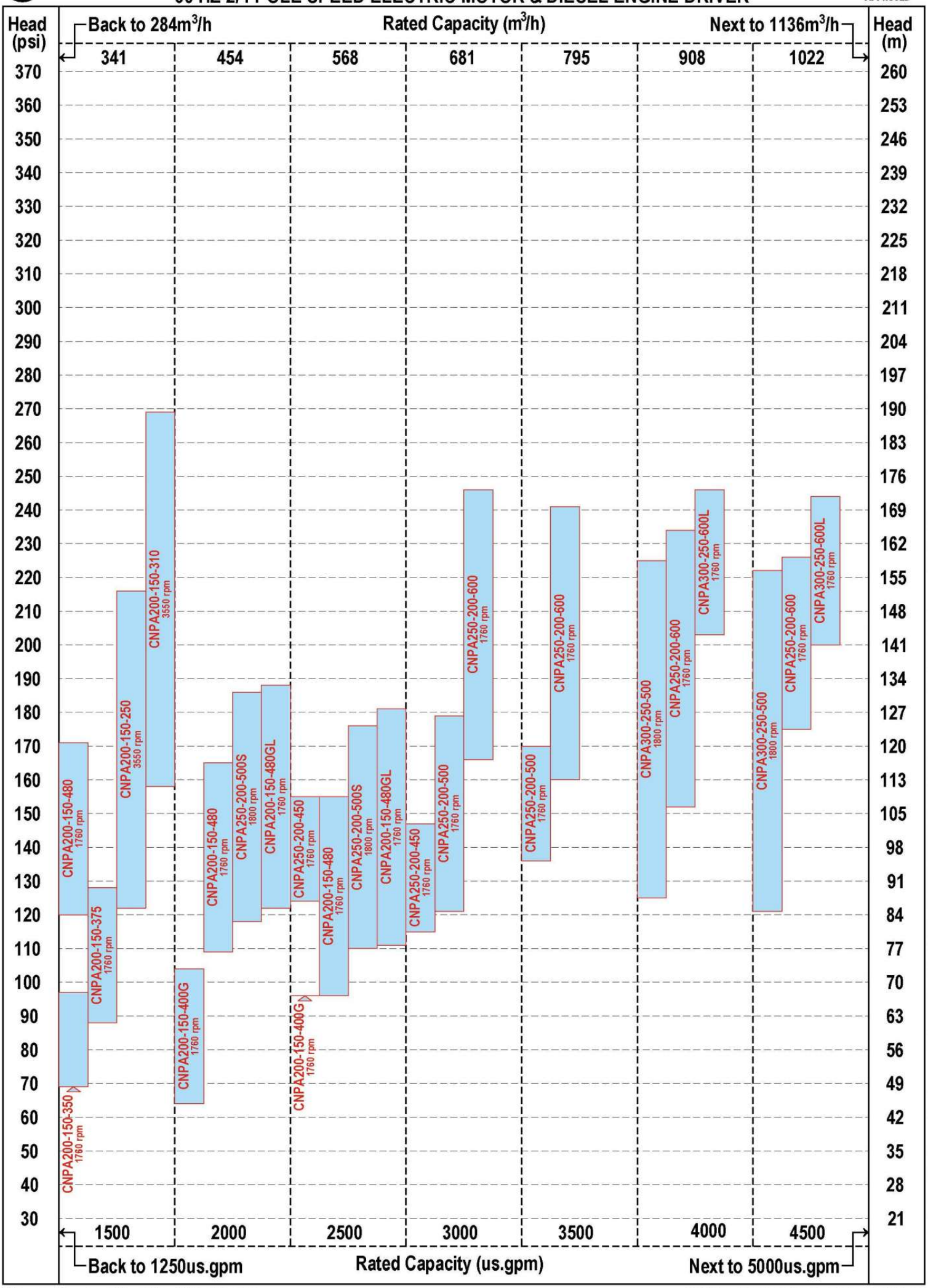

The contents of this publication must not be regarded as binding. EBARA ENGINEERING SINGAPORE PTE. LTD. reserves the right to effect any modification it deems necessary, without prior notice.

SINGLE STAGE DOUBLE SUCTION HORIZONTAL SPLIT CASE CENTRIFUGAL UL LISTED/FM APPROVED FIRE PUMPS SELECTION CHART FOR 60 HZ 2/4 POLE SPEED ELECTRIC MOTOR & DIESEL ENGINE DRIVER

UL LISTED

FM APPROVED

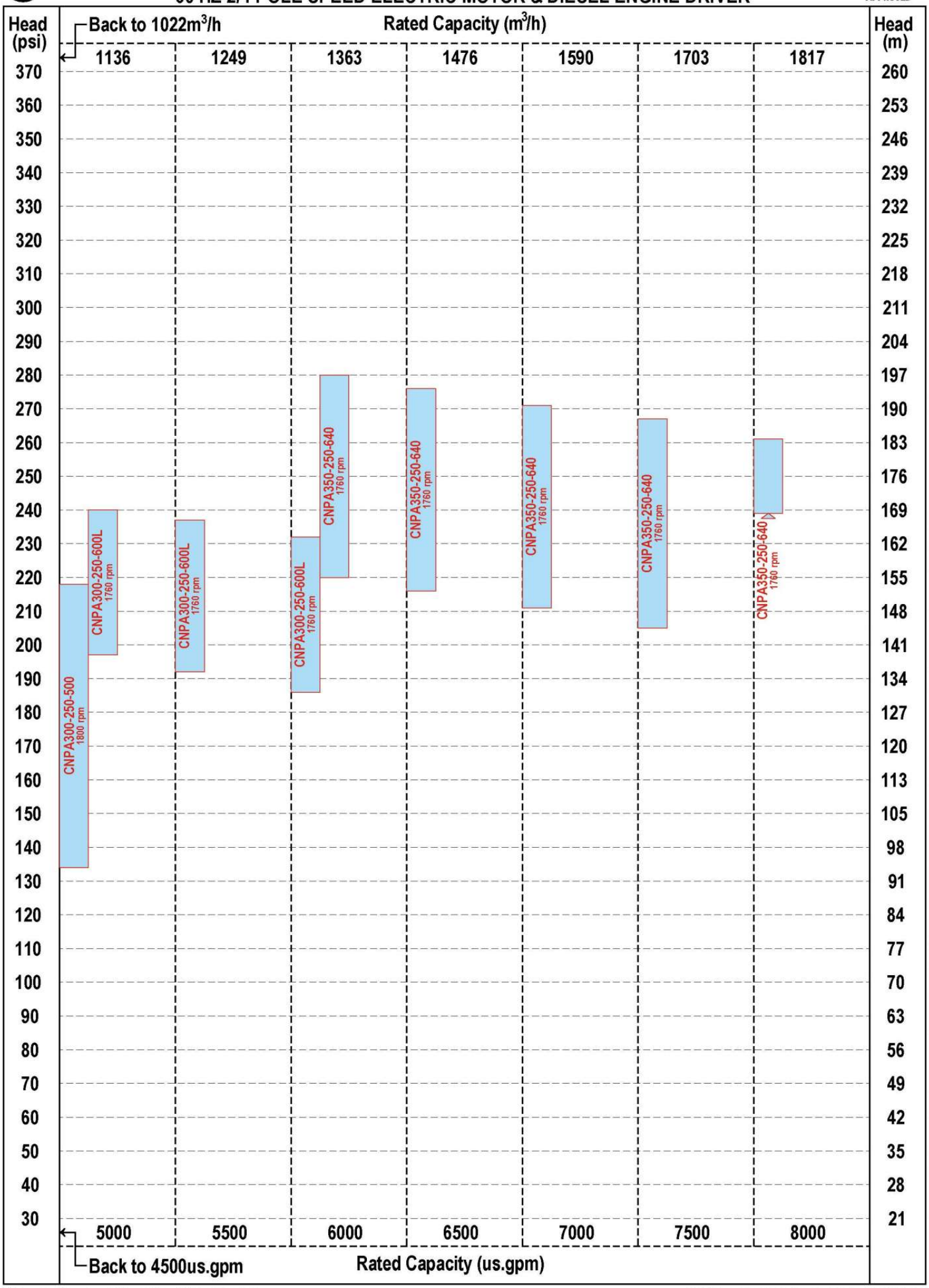

The contents of this publication must not be regarded as binding. EBARA ENGINEERING SINGAPORE PTE. LTD. reserves the right to effect any modification it deems necessary, without prior notice.

SINGLE STAGE DOUBLE SUCTION HORIZONTAL SPLIT CASE CENTRIFUGAL UL LISTED/FM APPROVED FIRE PUMPS SELECTION CHART FOR OTHERS SPEED DIESEL ENGINE DRIVER

UL LISTED

FM APPROVED

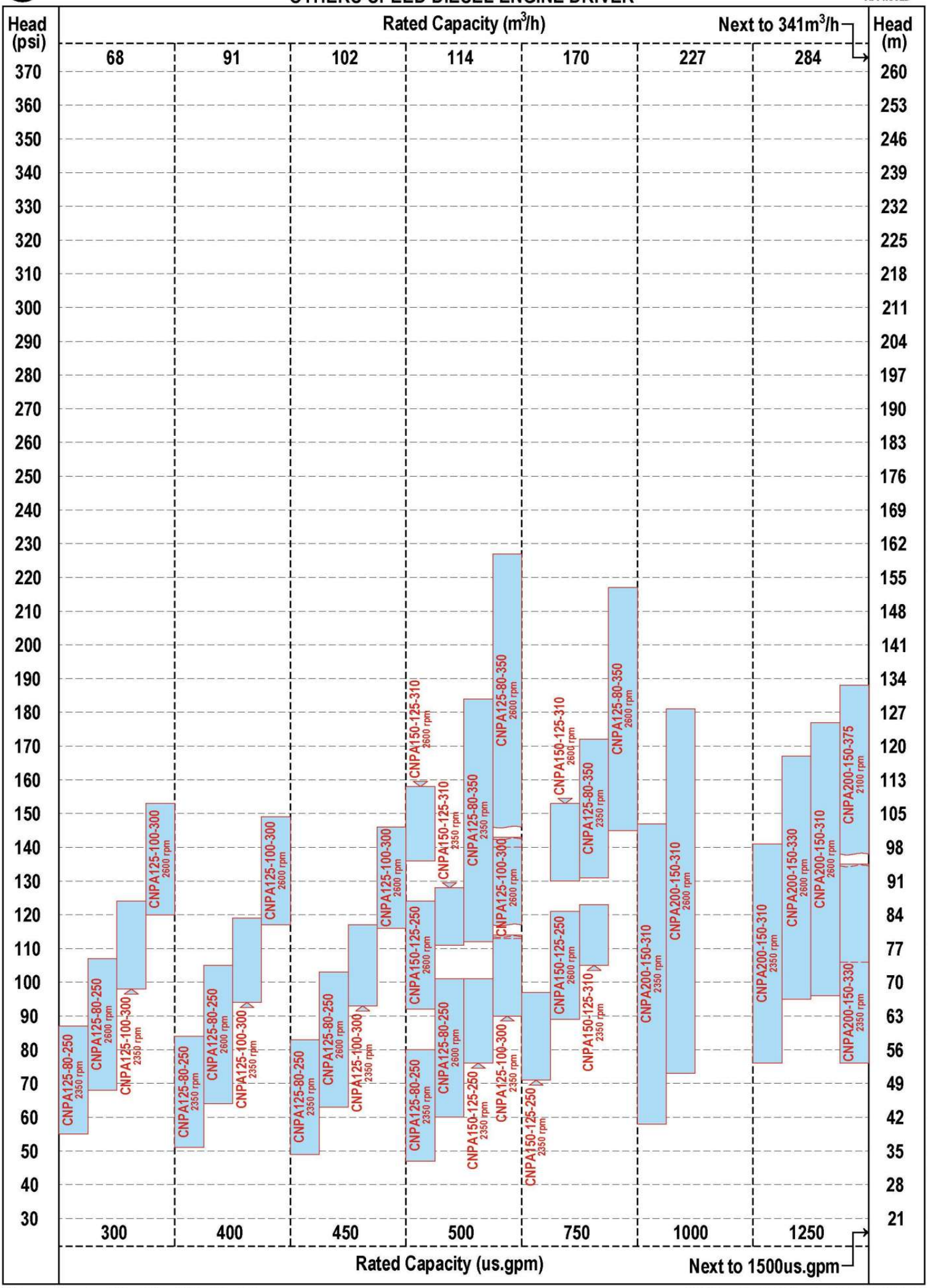

The contents of this publication must not be regarded as binding. EBARA ENGINEERING SINGAPORE PTE. LTD. reserves the right to effect any modification it deems necessary, without prior notice.

SINGLE STAGE DOUBLE SUCTION HORIZONTAL SPLIT CASE CENTRIFUGAL UL LISTED/FM APPROVED FIRE PUMPS SELECTION CHART FOR OTHERS SPEED DIESEL ENGINE DRIVER

UL LISTED

FM APPROVED

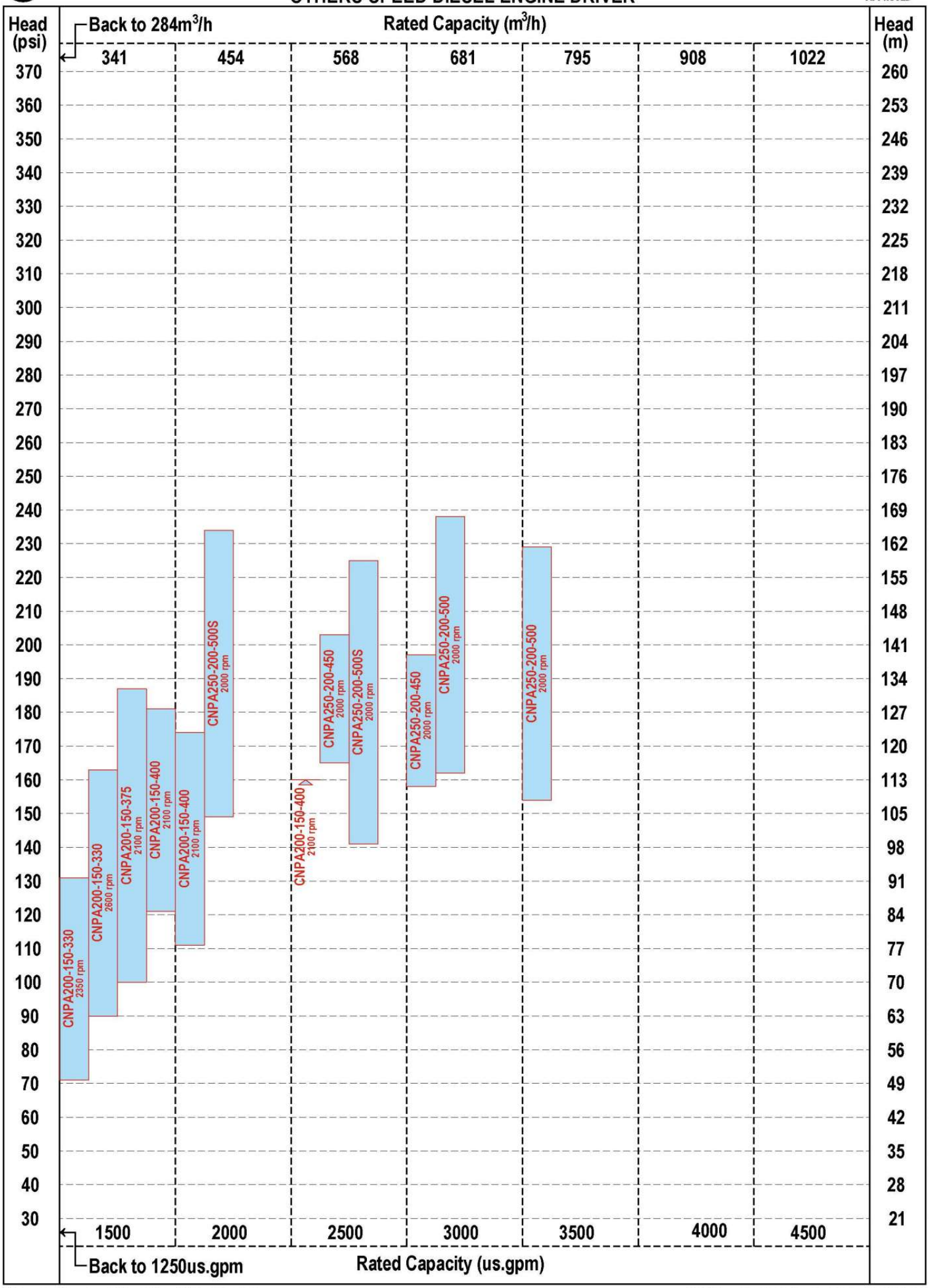

The contents of this publication must not be regarded as binding. EBARA ENGINEERING SINGAPORE PTE. LTD. reserves the right to effect any modification it deems necessary, without prior notice.

MULTI STAGE DOUBLE SUCTION HORIZONTAL SPLIT CASE CENTRIFUGAL UL LISTED/FM APPROVED FIRE PUMPS SELECTION CHART FOR 50 HZ 2/4 POLE SPEED ELECTRIC MOTOR & DIESEL ENGINE DRIVER

UL LISTED

FM APPROVED

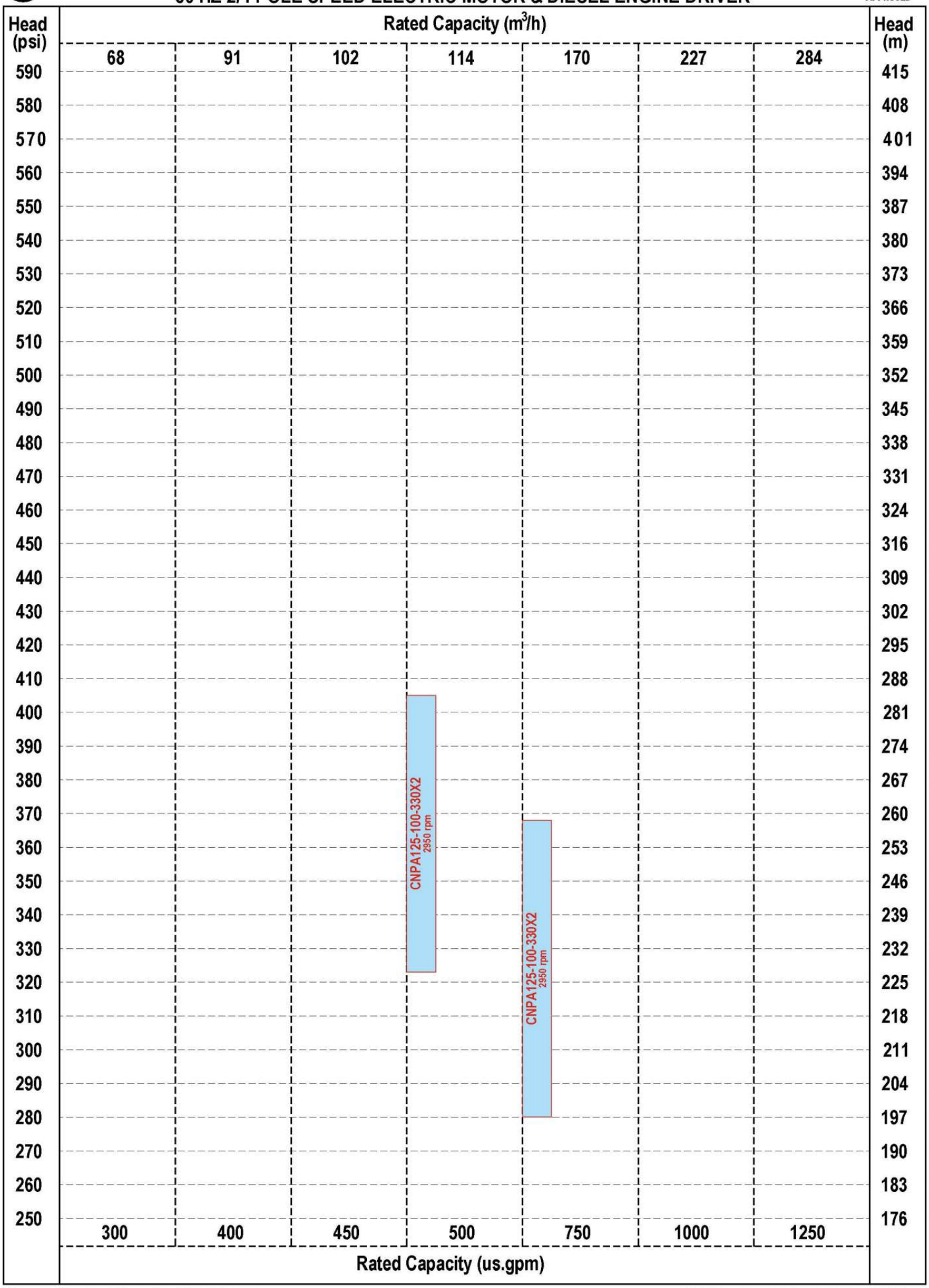

The contents of this publication must not be regarded as binding. EBARA ENGINEERING SINGAPORE PTE. LTD. reserves the right to effect any modification it deems necessary, without prior notice.

MULTI STAGE DOUBLE SUCTION HORIZONTAL SPLIT CASE CENTRIFUGAL UL LISTED/FM APPROVED FIRE PUMPS SELECTION CHART FOR 60 HZ 2/4 POLE SPEED ELECTRIC MOTOR & DIESEL ENGINE DRIVER

UL LISTED

FM APPROVED

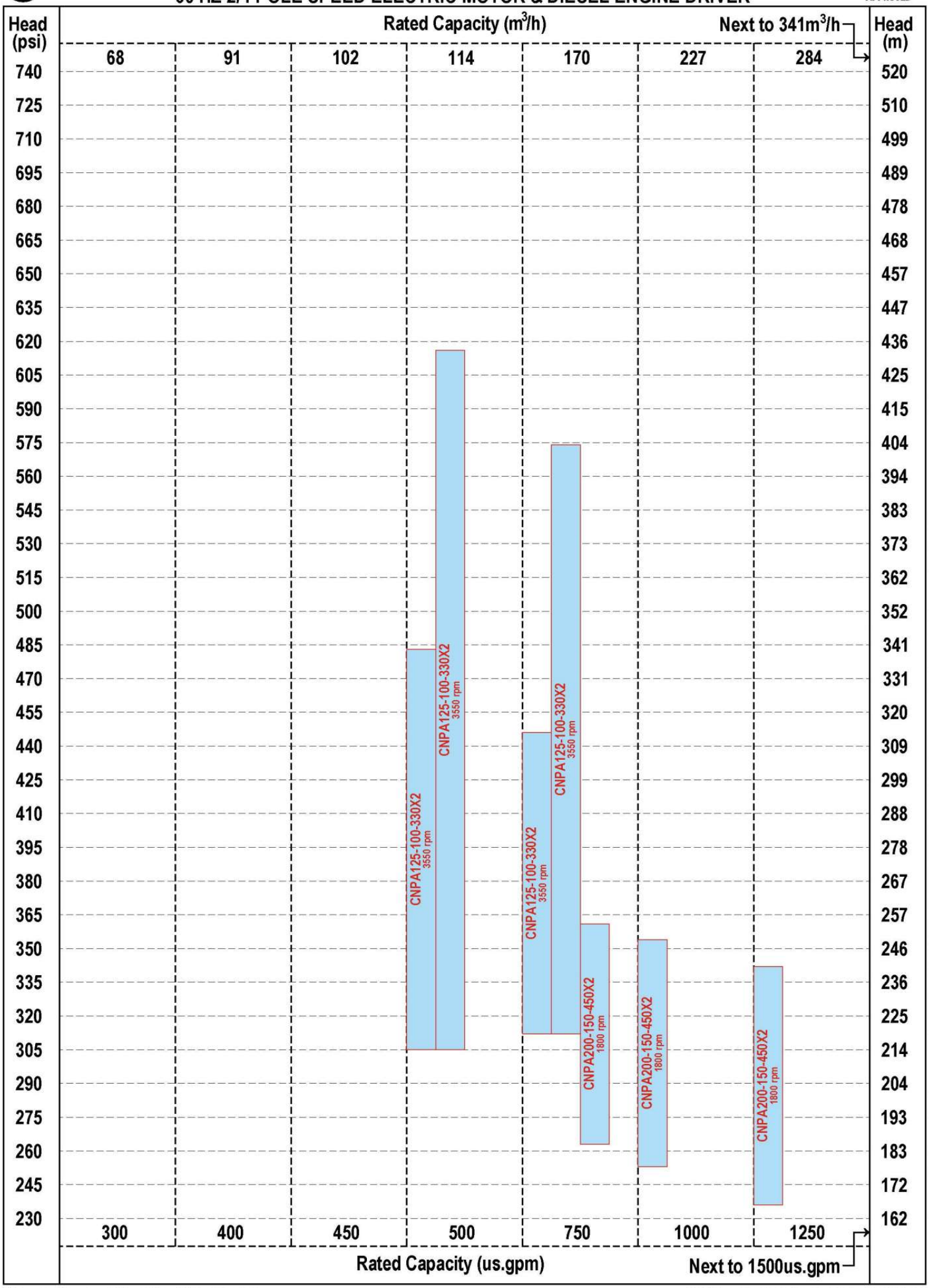

The contents of this publication must not be regarded as binding. EBARA ENGINEERING SINGAPORE PTE. LTD. reserves the right to effect any modification it deems necessary, without prior notice.

MULTI STAGE DOUBLE SUCTION HORIZONTAL SPLIT CASE CENTRIFUGAL UL LISTED/FM APPROVED FIRE PUMPS SELECTION CHART FOR 60 HZ 2/4 POLE SPEED ELECTRIC MOTOR & DIESEL ENGINE DRIVER

UL LISTED

FM APPROVED

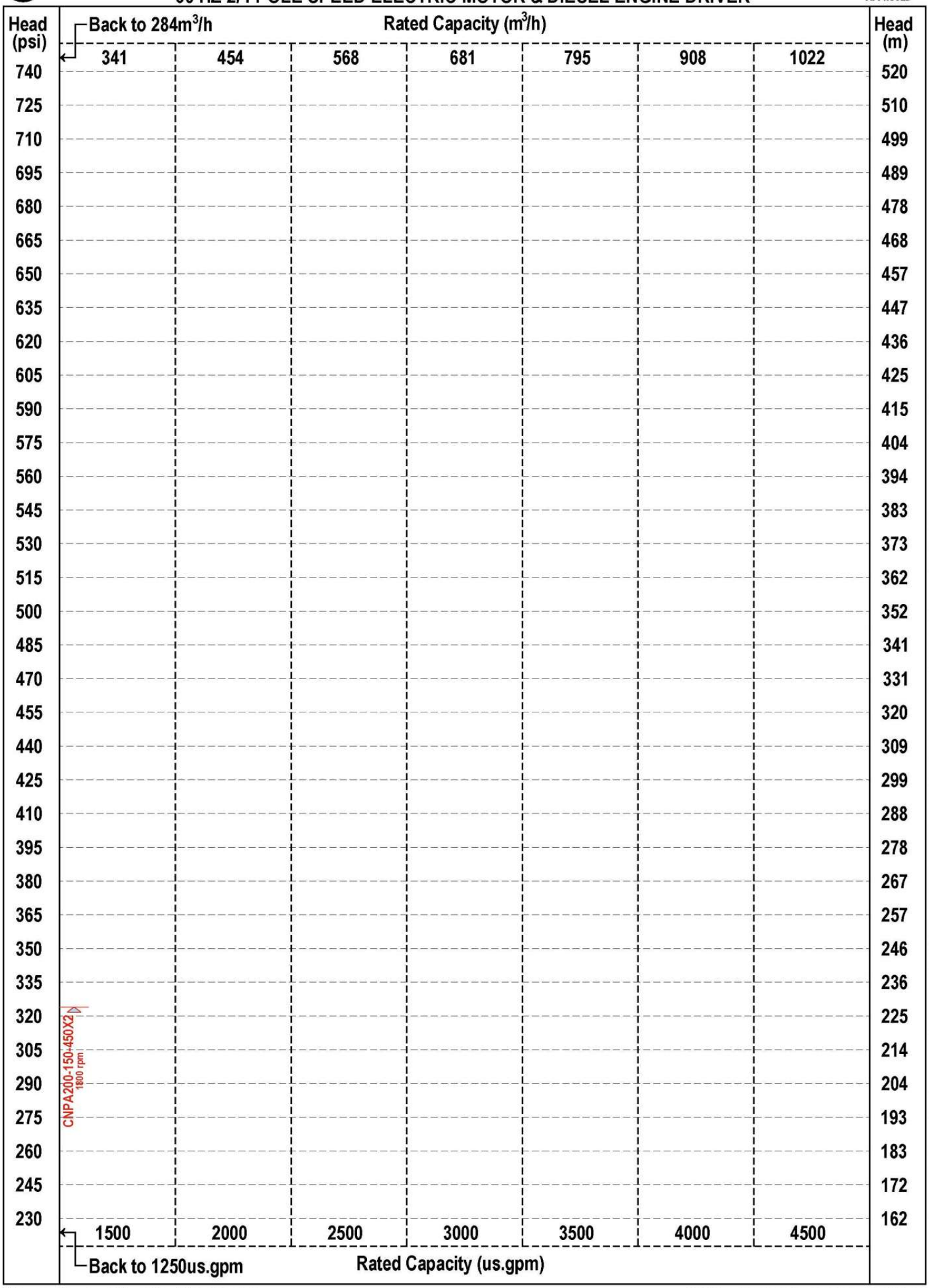

The contents of this publication must not be regarded as binding. EBARA ENGINEERING SINGAPORE PTE. LTD. reserves the right to effect any modification it deems necessary, without prior notice.

EBARA CNPAx DOUBLE SUCTION HORIZONTAL SPLIT CASE CENTRIFUGAL UL LISTED/FM APPROVED FIRE PUMPS DRIVRE SELECTION TABLE

UL LISTED

FM APPROVED

RATED FLOW: 300us.gpm(68m3/h)

NEXT

HEAD (UL&FM)		IMPELLER	PUMP (UL&FM)	SPEED	MAX SHAFT POWER	MOTOR DRIVER (UL)		DIESEL ENGINE DRIVER (UL/FM/T3)			
psi	meter	Dia.mm	MODEL CNPAx	rpm	hp	MODEL NEMA SF:1.15 ODP/TEFC	hp	MODEL (UL&FM)	hp	MODEL (UL/T3)	hp
54	38	Min.206mm	CNPA125-80-250	2350	20					NM4-101C-EC	130
60	42	UL:55~87psi FM:54~86psi			23						
65	46				25						
70	49				27						
75	53				30						
80	56				32						
85	60				35						
87	61	Max.253mm			36						
98	69	Min.280mm	CNPA125-100-300	2350	47						
100	70	UL:98~124psi FM:98~123psi			48						
105	74				50						
110	77				52						
115	81				54						
120	84				56						
124	87	Max.315mm			57						
68	48	Min.206mm	CNPA125-80-250	2600	27					CFP5E-F10	104
70	49	UL:68~107psi FM:66~105psi			28						
75	53				30						
80	56				33						
85	60				36						
90	63				38						
95	67				41						
100	70				44						
105	74				47						
107	75	Max.253mm			48						
120	84	Min.280mm	CNPA125-100-300	2600	62						
125	88	UL:120~153psi FM:120~152psi			64						
130	91				67						
135	95				69						
140	98				72						
145	102				74						
150	106				76						
153	108	Max.315mm			78						
53	37	Min.163mm	CNPA125-80-200	2980	25	F-TDC286TS30U2B /F-TXC286TS30U2B	30	NM4-90C	40	NM4-90	51
55	39	UL:54~81psi FM:53~80psi			26						
60	42				29						
65	46				32						
70	49				35	F-TDC286TS40U2B /F-TXC324TS40U2B	40				
75	53				38						
80	56	Max.204mm			41			NM4-90B	61		
83	58	Min.200mm	CNPA125-80-250	2950	39	F-TDC286TS40U2B /F-TXC324TS40U2B	40	NM4-90C	40	NM4-90	51
86	60	Max.253mm			40						
87	61	Min.210mm	CNPA100-80-250	2980	39	F-TDC286TS40U2B /F-TXC324TS40U2B	40	NM4-90C	40	NM4-90	51
90	63	UL:87~152psi FM:87~153psi			40						
95	67				41			NM4-90B	61		
100	70				43						
105	74				44						
110	77				46						
115	81				48	F-TDC324TS50U2B /F-TXC326TS50U2B	50				
120	84				50						
125	88				52					NM4-105	86
130	91				54						
135	95				57						
140	98				59	F-TDC326TS60U2B /F-TXC364TS60U2B	60				
145	102				62			NM4-102C	75		
150	106				65						
153	108	Max.280mm			67						

The contents of this publication must not be regarded as binding. EBARA ENGINEERING SINGAPORE PTE. LTD. reserves the right to effect any modification it deems necessary, without prior notice.

EBARA CNPAx DOUBLE SUCTION HORIZONTAL SPLIT CASE CENTRIFUGAL
UL LISTED/FM APPROVED FIRE PUMPS DRIVRE SELECTION TABLE

UL LISTED

FM APPROVED

PREV

RATED FLOW: 300us.gpm(68m3/h)

HEAD (UL&FM)		IMPELLER	PUMP (UL&FM)	SPEED	MAX SHAFT POWER	MOTOR DRIVER (UL)		DIESEL ENGINE DRIVER (UL/FM/T3)			
psi	meter	Dia.mm	MODEL CNPAx	rpm	hp	MODEL NEMA SF:1.15 ODP/TEFC	hp	MODEL (UL&FM)	hp	MODEL (UL/T3)	hp
154	108	Min.250mm	CNPA125-100-300	2980	88	F-TDC365TS100U2B /F-TXC405TS100U2B	100	NM4-102B	95	NM4-108	94
160	113	UL:123~195psi FM:123~195psi			91					NM4-108B	121
165	116				94						
170	120				96			NM4-108B	117		
175	123				99						
180	127				101						
185	130				103						
190	134				105						
195	137	Max.315mm			107						
200	141	UL: - psi FM: - psi			111						
205	144				116	F-TDC404TS125U2B /F-TXC444TS125U2B	125				
209	147	Max.326mm			120			NM6-110B	148		
77	54	Min.163mm	CNPA125-80-200	3550	42	F-TDC286TS40U2B /F-TXC324TS40U2B	40				
80	56	UL:78~115psi FM:77~115psi			44						
85	60				48	F-TDC324TS50U2B /F-TXC326TS50U2B	50				
90	63				52						
95	67				55						
100	70				59	F-TDC326TS60U2B /F-TXC364TS60U2B	60				
101	71	Max.204mm			60						
102	72	Min.192mm	CNPA100-80-200	3550	39	F-TDC286TS40U2B /F-TXC324TS40U2B	40				
105	74	UL:103~133psi FM:102~132psi			40						
110	77				44						
115	81				47	F-TDC324TS50U2B /F-TXC326TS50U2B	50				
120	84				50						
125	88				53						
130	91				57						
132	93	Max.215mm			58	F-TDC326TS60U2B /F-TXC364TS60U2B	60				
133	94	Min.210mm	CNPA100-80-250	3550	66	F-TDC326TS60U2B /F-TXC364TS60U2B	60				
135	95	UL:122~217psi FM:124~218psi			67						
140	98				69						
145	102				71	F-TDC365TS75U2B /F-TXC365TS75U2B	75				
150	106				73						
155	109				75						
160	113				77						
165	116				80						
170	120				82						
175	123				85						
180	127				88	F-TDC365TS100U2B /F-TXC405TS100U2B	100				
185	130				91						
190	134				93						
195	137				97						
200	141				100						
205	144				104						
210	148				107						
215	151				111						
217	153	Max.280mm			113						
218	153	Min.250mm	CNPA125-100-300	3550	148	F-TDC405TS150U2B /F-TXC445TS150U2B	150				
220	155	UL:176~279psi FM:176~279psi			149						
225	158				152						
230	162				155						
235	165				158						
240	169				160						
245	172				163						
250	176				166						
255	179				169						
260	183				171						
265	186				174	F-TDC444TS200U2B /F-TXC447TS200U2B	200				
270	190				176						
275	193				179						
279	196	Max.315mm			181						

The contents of this publication must not be regarded as binding. EBARA E NGINEERING SINGAPORE PTE. LTD. reserves the right to effect any modification it deems necessary, without prior notice.

EBARA CNPAx DOUBLE SUCTION HORIZONTAL SPLIT CASE CENTRIFUGAL UL LISTED/FM APPROVED FIRE PUMPS DRIVRE SELECTION TABLE

UL LISTED

FM APPROVED

RATED FLOW: 400us.gpm(91m3/h)

NEXT

HEAD (UL&FM)		IMPELLER	PUMP (UL&FM)	SPEED	MAX SHAFT POWER	MOTOR DRIVER (UL)		DIESEL ENGINE DRIVER (UL/FM/T3)			
psi	meter	Dia.mm	MODEL CNPAx	rpm	hp	MODEL NEMA SF:1.15 ODP/TEFC	hp	MODEL (UL&FM)	hp	MODEL (UL/T3)	hp
50	35	Min.206mm	CNPA125-80-250	2350	20					NM4-101C-EC	130
55	39	UL:55~87psi FM:54~86psi			22						
60	42				24						
65	46				27						
70	49				29						
75	53				31						
80	56				34						
84	59	Max.253mm			36						
94	66	Min.280mm	CNPA125-100-300	2350	47						
100	70	UL:94~119psi FM:94~118psi			50						
105	74				52						
110	77				53						
115	81				55						
119	84	Max.315mm			57						
63	44	Min.206mm	CNPA125-80-250	2600	26					CFP5E-F10	104
65	46	UL:64~105psi FM:63~103psi			27						
70	49				29						
75	53				32						
80	56				35						
85	60				37						
90	63				40						
95	67				42						
100	70				45						
104	73	Max.253mm			47						
118	83	Min.280mm	CNPA125-100-300	2600	63						
120	84	UL:117~149psi FM:117~147psi			64						
125	88				66						
130	91				69						
135	95				71						
140	98				74						
145	102				76						
148	104	Max.315mm			78						
52	37	Min.163mm	CNPA125-80-200	2980	25	F-TDC286TS30U2B /F-TXC286TS30U2B	30	NM4-90C	40	NM4-90	51
55	39	UL:53~79psi FM:52~79psi			27						
60	42				30						
65	46				33						
70	49				36	F-TDC286TS40U2B /F-TXC324TS40U2B	40				
75	53				39						
79	56	Max.204mm			41			NM4-90B	61		
83	58	Min.210mm	CNPA100-80-250	2980	39	F-TDC286TS40U2B /F-TXC324TS40U2B	40	NM4-90C	40	NM4-90	51
85	60	UL:84~150psi FM:83~149psi			40			NM4-90B	61		
90	63				41						
95	67				42						
100	70				44						
105	74				46						
110	77				48	F-TDC324TS50U2B /F-TXC326TS50U2B	50				
115	81				49						
120	84				52					NM4-105	86
125	88				54						
130	91				56						
135	95				59	F-TDC326TS60U2B /F-TXC364TS60U2B	60				
140	98				61						
145	102				64			NM4-102C	75		
149	105	Max.280mm			66						

The contents of this publication must not be regarded as binding. EBARA ENGINEERING SINGAPORE PTE. LTD. reserves the right to effect any modification it deems necessary, without prior notice.

EBARA CNPAx DOUBLE SUCTION HORIZONTAL SPLIT CASE CENTRIFUGAL
UL LISTED/FM APPROVED FIRE PUMPS DRIVRE SELECTION TABLE

UL LISTED

FM APPROVED

PREV

RATED FLOW: 400us.gpm(91m3/h)

HEAD (UL&FM)		IMPELLER	PUMP (UL&FM)	SPEED	MAX SHAFT POWER	MOTOR DRIVER (UL)		DIESEL ENGINE DRIVER (UL/FM/T3)			
psi	meter	Dia.mm	MODEL CNPAx	rpm	hp	MODEL NEMA SF:1.15 ODP/TEFC	hp	MODEL (UL&FM)	hp	MODEL (UL/T3)	hp
150	106	Min.250mm	CNPA125-100-300	2980	88	F-TDC365TS100U2B /F-TXC405TS100U2B	100	NM4-102B	95	NM4-108	94
155	109	UL:120~189psi FM:120~189psi			91					NM4-108B	121
160	113				93						
165	116				96			NM4-108B	117		
170	120				98						
175	123				101						
180	127				103						
185	130	Max.315mm			105						
190	134	UL: - psi FM: - psi			108						
195	137				112						
200	141				116	F-TDC404TS125U2B /F-TXC444TS125U2B	125				
204	143	Max.326mm			120			NM6-110B	148		
76	53	Min.163mm	CNPA125-80-200	3550	42	F-TDC286TS40U2B /F-TXC324TS40U2B	40				
80	56	UL:76~113psi FM:76~113psi			46						
85	60				49	F-TDC324TS50U2B /F-TXC326TS50U2B	50				
90	63				53						
95	67				57						
97	68	Max.204mm			58	F-TDC326TS60U2B /F-TXC364TS60U2B	60				
98	69	Min.192mm	CNPA100-80-200	3550	39	F-TDC286TS40U2B /F-TXC324TS40U2B	40				
100	70	UL:99~131psi FM:98~130psi			40						
105	74				43						
110	77				46						
115	81				49	F-TDC324TS50U2B /F-TXC326TS50U2B	50				
120	84				52						
125	88				55						
130	91	Max.215mm			58	F-TDC326TS60U2B /F-TXC364TS60U2B	60				
131	92	Min.210mm	CNPA100-80-250	3550	66	F-TDC326TS60U2B /F-TXC364TS60U2B	60				
135	95	UL:123~215psi FM:122~215psi			67						
140	98				69						
145	102				72	F-TDC365TS75U2B /F-TXC365TS75U2B	75				
150	106				74						
155	109				76						
160	113				79						
165	116				81						
170	120				84						
175	123				86						
180	127				89	F-TDC365TS100U2B /F-TXC405TS100U2B	100				
185	130				92						
190	134				96						
195	137				99						
200	141				102						
205	144				106						
210	148				110						
215	151	Max.280mm			114						
216	152	Min.250mm	CNPA125-100-300	3550	149	F-TDC405TS150U2B /F-TXC445TS150U2B	150				
220	155	UL:173~274psi FM:173~274psi			151						
225	158				154						
230	162				157						
235	165				160						
240	169				163						
245	172				165						
250	176				168						
255	179				171						
260	183				173	F-TDC444TS200U2B /F-TXC447TS200U2B	200				
265	186				176						
270	190				179						
274	193	Max.315mm			181						

The contents of this publication must not be regarded as binding. EBARA E NGINEERING SINGAPORE PTE. LTD. reserves the right to effect any modification it deems necessary, without prior notice.

EBARA CNPAx DOUBLE SUCTION HORIZONTAL SPLIT CASE CENTRIFUGAL UL LISTED/FM APPROVED FIRE PUMPS DRIVRE SELECTION TABLE

UL LISTED

FM APPROVED

RATED FLOW: 450us.gpm(102m3/h)

NEXT

HEAD (UL&FM)		IMPELLER	PUMP (UL&FM)	SPEED	MAX SHAFT POWER	MOTOR DRIVER (UL)		DIESEL ENGINE DRIVER (UL/FM/T3)			
psi	meter	Dia.mm	MODEL CNPAx	rpm	hp	MODEL NEMA SF:1.15 ODP/TEFC	hp	MODEL (UL&FM)	hp	MODEL (UL/T3)	hp
48	34	Min.206mm	CNPA125-80-250	2350	20					NM4-101C-EC	130
50	35	UL:55~87psi FM:54~86psi			21						
55	39				23						
60	42				25						
65	46				28						
70	49				30						
75	53				32						
80	56	Max.253mm			35						
92	65	Min.280mm	CNPA125-100-300	2350	47						
95	67	UL:93~117psi FM:92~115psi			48						
100	70				50						
105	74				52						
110	77				54						
115	81				56						
117	82	Max.315mm			57						
61	43	Min.206mm	CNPA125-80-250	2600	26					CFP5E-F10	104
65	46	UL:63~103psi FM:61~101psi			28						
70	49				30						
75	53				33						
80	56				35						
85	60				38						
90	63				41						
95	67				44						
100	70				46						
103	72	Max.253mm			48						
115	81	Min.280mm	CNPA125-100-300	2600	62						
120	84	UL:116~146psi FM:114~145psi			65						
125	88				67						
130	91				70						
135	95				73						
140	98				75						
145	102	Max.315mm			77						
51	36	Min.163mm	CNPA125-80-200	2980	25	F-TDC286TS30U2B /F-TXC286TS30U2B	30	NM4-90C	40	NM4-90	51
55	39	UL:52~78psi FM:51~78psi			27						
60	42				30						
65	46				33						
70	49				36	F-TDC286TS40U2B /F-TXC324TS40U2B	40				
75	53				39						
78	55	Max.204mm			41			NM4-90B	61		
80	56	Min.210mm	CNPA100-80-250	2980	39	F-TDC286TS40U2B /F-TXC324TS40U2B	40	NM4-90C	40	NM4-90	51
85	60	UL:82~147psi FM:80~146psi			40			NM4-90B	61		
90	63				42						
95	67				43						
100	70				45						
105	74				47	F-TDC324TS50U2B /F-TXC326TS50U2B	50				
110	77				49						
115	81				51						
120	84				53					NM4-105	86
125	88				55						
130	91				58	F-TDC326TS60U2B /F-TXC364TS60U2B	60				
135	95				60						
140	98				63			NM4-102C	75		
146	103	Max.280mm			66						

The contents of this publication must not be regarded as binding. EBARA E NGINEERING SINGAPORE PTE. LTD. reserves the right to effect any modification it deems necessary, without prior notice.

EBARA CNPAx DOUBLE SUCTION HORIZONTAL SPLIT CASE CENTRIFUGAL UL LISTED/FM APPROVED FIRE PUMPS DRIVRE SELECTION TABLE

UL LISTED

FM APPROVED

PREV

RATED FLOW: 450us.gpm(102m3/h)

HEAD (UL&FM)		IMPELLER	PUMP (UL&FM)	SPEED	MAX SHAFT POWER	MOTOR DRIVER (UL)		DIESEL ENGINE DRIVER (UL/FM/T3)			
psi	meter	Dia.mm	MODEL CNPAx	rpm	hp	MODEL NEMA SF:1.15 ODP/TEFC	hp	MODEL (UL&FM)	hp	MODEL (UL/T3)	hp
147	103	Min.250mm	CNPA125-100-300	2980	88	F-TDC365TS100U2B /F-TXC405TS100U2B	100	NM4-102B	95	NM4-108	94
150	106	UL:119~187psi FM:119~187psi			89						
155	109				92						
160	113				94						
165	116				97					NM4-108B	121
170	120				99			NM4-108B	117		
175	123				102						
180	127				104						
185	130	Max.315mm			106						
190	134	UL: - psi FM: - psi			109						
195	137				114						
200	141				119	F-TDC404TS125U2B /F-TXC444TS125U2B	125				
201	141	Max.326mm			120			NM6-110B	148		
75	53	Min.163mm	CNPA125-80-200	3550	42	F-TDC286TS40U2B /F-TXC324TS40U2B	40				
80	56	UL:75~112psi FM:75~112psi			46						
85	60				50	F-TDC324TS50U2B /F-TXC326TS50U2B	50				
90	63				53						
94	66	Max.204mm			57						
95	67	Min.192mm	CNPA100-80-200	3550	39	F-TDC286TS40U2B /F-TXC324TS40U2B	40				
100	70	UL:95~129psi FM:94~127psi			42						
105	74				45	F-TDC324TS50U2B /F-TXC326TS50U2B	50				
110	77				48						
115	81				50						
120	84				53						
125	88				56						
127	89	Max.215mm			58	F-TDC326TS60U2B /F-TXC364TS60U2B	60				
128	90	Min.210mm	CNPA100-80-250	3550	66	F-TDC326TS60U2B /F-TXC364TS60U2B	60				
130	91	UL:121~213psi FM:120~213psi			66						
135	95				68						
140	98				70	F-TDC365TS75U2B /F-TXC365TS75U2B	75				
145	102				72						
150	106				75						
155	109				77						
160	113				79						
165	116				82						
170	120				85						
175	123				87	F-TDC365TS100U2B /F-TXC405TS100U2B	100				
180	127				90						
185	130				93						
190	134				97						
195	137				100						
200	141				104						
205	144				107						
210	148				111						
213	150	Max.280mm			114						
214	151	Min.250mm	CNPA125-100-300	3550	149	F-TDC405TS150U2B /F-TXC445TS150U2B	150				
220	155	UL:172~272psi FM:172~272psi			153						
225	158				155						
230	162				158						
235	165				161						
240	169				164						
245	172				167						
250	176				169						
255	179				172						
260	183				175	F-TDC444TS200U2B /F-TXC447TS200U2B	200				
265	186				177						
270	190				180						
272	191	Max.315mm			181						

The contents of this publication must not be regarded as binding. EBARA E NGINEERING SINGAPORE PTE. LTD. reserves the right to effect any modification it deems necessary, without prior notice.

EBARA CNPAx DOUBLE SUCTION HORIZONTAL SPLIT CASE CENTRIFUGAL
UL LISTED/FM APPROVED FIRE PUMPS DRIVRE SELECTION TABLE

UL LISTED

FM APPROVED

RATED FLOW: 500us.gpm(114m3/h)

NEXT

HEAD (UL&FM)		IMPELLER	PUMP (UL&FM)	SPEED	MAX SHAFT POWER	MOTOR DRIVER (UL)		DIESEL ENGINE DRIVER (UL/FM/T3)			
psi	meter	Dia.mm	MODEL CNPAx	rpm	hp	MODEL NEMA SF:1.15 ODP/TEFC	hp	MODEL (UL&FM)	hp	MODEL (UL/T3)	hp
45	32	Min.206mm	CNPA125-80-250	2350	20					NM4-101C-EC	130
50	35	UL:55~87psi FM:54~86psi			22						
55	39				25						
60	42				27						
65	46				29						
70	49				31						
75	53				34						
80	56	Max.253mm			36						
89	63	Min.280mm	CNPA125-100-300	2350	47						
95	67	UL:90~114psi FM:89~111psi			50						
100	70				52						
105	74				53						
110	77				55						
114	80	Max.307mm			57						
115	81	Min.320mm	CNPA125-80-350	UL:2350 FM:2380	57						
120	84	UL:112~184psi FM:116~191psi			62						
125	88				66						
130	91				70						
135	95				75						
140	98				79						
145	102				84						
150	106				88						
155	109				93						
160	113				97						
165	116				102						
170	120				107						
175	123				112						
180	127				117						
185	130				122						
191	134	Max.395mm			128						
58	41	Min.206mm	CNPA125-80-250	2600	26					CFP5E-F10	104
60	42	UL:60~101psi FM:58~98psi			27						
65	46				29						
70	49				32						
75	53				34						
80	56				37						
85	60				39						
90	63				42						
95	67				45						
101	71	Max.253mm			48						
112	79	Min.280mm	CNPA125-100-300	2600	62						
115	81	UL:113~143psi FM:112~141psi			64						
120	84				66						
125	88				69						
130	91				71						
135	95				74						
140	98				76						
141	99	Max.307mm			77						

The contents of this publication must not be regarded as binding. EBARA E NGINEERING SINGAPORE PTE. LTD. reserves the right to effect any modification it deems necessary, without prior notice.

EBARA CNPAx DOUBLE SUCTION HORIZONTAL SPLIT CASE CENTRIFUGAL UL LISTED/FM APPROVED FIRE PUMPS DRIVRE SELECTION TABLE

UL LISTED

FM APPROVED

PREV

RATED FLOW: 500us.gpm(114m3/h)

NEXT

HEAD (UL&FM)		IMPELLER	PUMP (UL&FM)	SPEED	MAX SHAFT POWER	MOTOR DRIVER (UL)		DIESEL ENGINE DRIVER (UL/FM/T3)			
psi	meter	Dia.mm	MODEL CNPAx	rpm	hp	MODEL NEMA SF:1.15 ODP/TEFC	hp	MODEL (UL&FM)	hp	MODEL (UL/T3)	hp
142	100	Min.320mm	CNPA125-80-350	2600	75					CFP5E-F10	104
145	102	UL:140~227psi FM:142~230psi			77						
150	106				82						
155	109				86						
160	113				91						
165	116				95						
170	120				100						
175	123				104						
180	127				109					CFP5E-F20	117
185	130				114						
190	134				120					CFP5E-F30	129
195	137				126						
200	141				133					CFP5E-F40	141
205	144				139						
210	148				144					CFP5E-F50	148
215	151				149					CFP7E-F10	174
220	155				154						
225	158				159						
230	162	Max.395mm			163						
50	35	Min.163mm	CNPA125-80-200	2980	25	F-TDC286TS30U2B /F-TXC286TS30U2B	30	NM4-90C	40	NM4-90	51
55	39	UL: 51~77psi FM:50~77psi			28						
60	42				31						
65	46				34						
70	49				37	F-TDC286TS40U2B /F-TXC324TS40U2B	40				
75	53				40						
77	54	Max.204mm			41			NM4-90B	61		
78	55	Min.210mm	CNPA100-80-250	2980	39	F-TDC286TS40U2B /F-TXC324TS40U2B	40	NM4-90C	40	NM4-90	51
80	56	UL:79~144psi FM:78~142psi			40			NM4-90B	61		
85	60				41						
90	63				43						
95	67				44						
100	70				46						
105	74				48	F-TDC324TS50U2B /F-TXC326TS50U2B	50				
110	77				50						
115	81				52					NM4-105	86
120	84				54						
125	88				57						
130	91				59	F-TDC326TS60U2B /F-TXC364TS60U2B	60				
135	95				62			NM4-102C	75		
140	98				65						
144	101	Max.280mm			67						
145	102	Min.250mm	CNPA125-100-300	2980	88	F-TDC365TS100U2B /F-TXC405TS100U2B	100	NM4-102B	95	NM4-108	94
150	106	UL: 117~184psi FM:117~184psi			91						
155	109				93						
160	113				96						
165	116				98			NM4-108B	117	NM4-108B	121
170	120				101						
175	123				103						
180	127				105						
184	129	Max.326mm			107						

The contents of this publication must not be regarded as binding. EBARA ENGINEERING SINGAPORE PTE. LTD. reserves the right to effect any modification it deems necessary, without prior notice.

EBARA CNPAx DOUBLE SUCTION HORIZONTAL SPLIT CASE CENTRIFUGAL
UL LISTED/FM APPROVED FIRE PUMPS DRIVRE SELECTION TABLE

UL LISTED

FM APPROVED

PREV

RATED FLOW: 500us.gpm(114m3/h)

NEXT

HEAD (UL&FM)		IMPELLER	PUMP (UL&FM)	SPEED	MAX SHAFT POWER	MOTOR DRIVER (UL)		DIESEL ENGINE DRIVER (UL/FM/T3)			
psi	meter	Dia.mm	MODEL CNPAx	rpm	hp	MODEL NEMA SF:1.15 ODP/TEFC	hp	MODEL (UL&FM)	hp	MODEL (UL/T3)	hp
185	130	Min.320mm	CNPA125-80-350	2950	111	F-TDC365TS100U2B /F-TXC405TS100U2B	100	NM4-108B	117	NM4-108B	121
190	134	UL:184~295psi FM:180~291psi			115						
195	137				119	F-TDC404TS125U2B /F-TXC444TS125U2B	125	NM6-110B	148	NM6-110B	153
200	141				123						
205	144				128						
210	148				133						
215	151				138						
220	155				143						
225	158				148	F-TDC405TS150U2B /F-TXC445TS150U2B	150				
230	162				154			NM6-110E	192	NM6-110E	192
235	165				160						
240	169				167						
245	172				173	F-TDC444TS200U2B /F-TXC447TS200U2B	200				
250	176				180						
255	179				187						
260	183				195			NM6-110D	239	NM6-110D	268
265	186				203						
270	190				211						
275	193				220						
280	197				228						
285	200				238	F-TDC449TS250U2B /F-TXC449TS250U2B	250	NM6-108E	335	NM6-108E	335
290	204				247						
295	208	Max.395mm			256						
323	227	Min.300mm	CNPA125-100-330X2	2950	181	F-TDC444TS200U2B /F-TXC447TS200U2B	200	NM6-110D	239	NM6-110D	268
325	229	UL:323~405psi FM:324~408psi			182						
330	232				185						
335	236				188						
340	239				192						
345	243				195						
350	246				199						
355	250				203						
360	253				207						
365	257				211						
370	260				215						
375	264				219						
380	267				223						
385	271				228						
390	274				232	F-TDC449TS250U2B /F-TXC449TS250U2B	250				
395	278				237			NM6-108E	335	NM6-108E	335
400	281				242						
405	285	Max.334mm			247						
73	51	Min.163mm	CNPA125-80-200	3550	42	F-TDC286TS40U2B /F-TXC324TS40U2B	40				
75	53	UL:74~111psi FM:73~111psi			44						
80	56				48	F-TDC324TS50U2B /F-TXC326TS50U2B	50				
85	60				51						
89	63	Max.204mm			55						
90	63	Min.192mm	CNPA100-80-200	3550	39	F-TDC286TS40U2B /F-TXC324TS40U2B	40				
95	67	UL: 91~127psi FM:89~125psi			42						
100	70				44						
105	74				47	F-TDC324TS50U2B /F-TXC326TS50U2B	50				
110	77				49						
115	81				52						
120	84				55						
125	88	Max.215mm			58	F-TDC326TS60U2B /F-TXC364TS60U2B	60				

The contents of this publication must not be regarded as binding. EBARA E NGINEERING SINGAPORE PTE. LTD. reserves the right to effect any modification it deems necessary, without prior notice.

EBARA CNPAx DOUBLE SUCTION HORIZONTAL SPLIT CASE CENTRIFUGAL UL LISTED/FM APPROVED FIRE PUMPS DRIVRE SELECTION TABLE

UL LISTED

FM APPROVED

PREV

RATED FLOW: 500us.gpm(114m3/h)

NEXT

HEAD (UL&FM)		IMPELLER	PUMP (UL&FM)	SPEED	MAX SHAFT POWER	MOTOR DRIVER (UL)		DIESEL ENGINE DRIVER (UL/FM/T3)			
psi	meter	Dia.mm	MODEL CNPAx	rpm	hp	MODEL NEMA SF:1.15 ODP/TEFC	hp	MODEL (UL&FM)	hp	MODEL (UL/T3)	hp
126	89	Min.210mm	CNPA100-80-250	3550	66	F-TDC326TS60U2B /F-TXC364TS60U2B	60				
130	91	UL:118~210psi FM:116~210psi			67						
135	95				69						
140	98				71	F-TDC365TS75U2B /F-TXC365TS75U2B	75				
145	102				74						
150	106				76						
155	109				79						
160	113				81						
165	116				84						
170	120				86						
175	123				89	F-TDC365TS100U2B /F-TXC405TS100U2B	100				
180	127				92						
185	130				95						
190	134				99						
195	137				102						
200	141				106						
205	144				110						
210	148	Max.280mm			114						
211	148	Min.250mm	CNPA125-100-300	3550	149	F-TDC405TS150U2B /F-TXC445TS150U2B	150				
215	151	UL:170~269psi FM:170~269psi			151						
220	155				154						
225	158				157						
230	162				160						
235	165				163						
240	169				165						
245	172				169						
250	176				171						
255	179				174	F-TDC444TS200U2B /F-TXC447TS200U2B	200				
260	183				176						
265	186				179						
269	189	Max.315mm			181						
270	190	Min.320mm	CNPA125-80-350	3550	201	F-TDC444TS200U2B /F-TXC447TS200U2B	200				
275	193	UL: 269~308psi FM:266~305psi			205						
280	197				209						
285	200				212						
290	204				216						
295	208				220						
300	211				224						
305	215				227						
308	217	Max.342mm			230						

The contents of this publication must not be regarded as binding. EBARA ENGINEERING SINGAPORE PTE. LTD. reserves the right to effect any modification it deems necessary, without prior notice.

EBARA CNPAx DOUBLE SUCTION HORIZONTAL SPLIT CASE CENTRIFUGAL
UL LISTED/FM APPROVED FIRE PUMPS DRIVRE SELECTION TABLE

UL LISTED

FM APPROVED

PREV

RATED FLOW: 500us.gpm(114m3/h)

HEAD (UL&FM)		IMPELLER	PUMP (UL&FM)	SPEED	MAX SHAFT POWER	MOTOR DRIVER (UL)		DIESEL ENGINE DRIVER (UL/FM/T3)			
psi	meter	Dia.mm	MODEL CNPAx	rpm	hp	MODEL NEMA SF:1.15 ODP/TEFC	hp	MODEL (UL&FM)	hp	MODEL (UL/T3)	hp
350	246	Min.260mm	CNPA125-100-330X2	3550	218	F-TDC444TS200U2B /F-TXC447TS200U2B	200				
355	250	UL: 350~616psi FM:352~600psi			221						
360	253				224						
365	257				227						
370	260				230						
375	264				234	F-TDC449TS250U2B /F-TXC449TS250U2B	250				
380	267				237						
385	271				240						
390	274				243						
395	278				247						
400	281				250						
405	285				254						
410	288				257						
415	292				261						
420	295				264						
425	299				268						
430	302				272						
435	306				276						
440	310				279						
445	313				283						
450	317				287						
455	320				291	F-TDC447TS300U2B /F-TXC449TS300U2B	300				
460	324				295						
465	327				299						
470	331				303						
475	334				307						
480	338				312						
485	341				316						
490	345				321						
495	348				324						
500	352				329						
505	355				334						
510	359				338						
515	362				343						
520	366				348	F-TDC449TS350U2B /F-TXC586/7TS350U2B	350				
525	369				353						
530	373				357						
535	376				362						
540	380				367						
545	383				372						
550	387				378						
555	390				382						
560	394				388						
565	397				393						
570	401				398						
575	404				404	F-TXC586/7TS400U2B	400				
580	408				409						
585	412				415						
590	415				421						
595	419				426						
600	422				432						
605	426				438						
610	429				444						
616	433	Max.334mm			451						

The contents of this publication must not be regarded as binding. EBARA E NGINEERING SINGAPORE PTE. LTD. reserves the right to effect any modification it deems necessary, without prior notice.

EBARA CNPAx DOUBLE SUCTION HORIZONTAL SPLIT CASE CENTRIFUGAL UL LISTED/FM APPROVED FIRE PUMPS DRIVRE SELECTION TABLE

UL LISTED

FM APPROVED

RATED FLOW: 750us.gpm(170m3/h)

NEXT

HEAD (UL&FM)		IMPELLER	PUMP (UL&FM)	SPEED	MAX SHAFT POWER	MOTOR DRIVER (UL)		DIESEL ENGINE DRIVER (UL/FM/T3)			
psi	meter	Dia.mm	MODEL CNPAx	rpm	hp	MODEL NEMA SF:1.15 ODP/TEFC	hp	MODEL (UL&FM)	hp	MODEL (UL/T3)	hp
69	49	Min.248mm	CNPA150-125-250	2350	45					NM4-101C-EC	130
75	53	UL:55~87psi FM:54~86psi			49						
80	56				53						
85	60				57						
90	63				61						
95	67				65						
98	69	Max.285mm			68						
105	74	Min.302mm	CNPA150-125-310	2350	77						
110	77	UL:105~123psi FM:105~122psi			81						
115	81				84						
120	84				88						
122	86	Max.326mm			90						
131	92	Min.360mm	CNPA125-80-350	UL:2350 FM:2380	83						
135	95	UL:131~172psi FM:132~179psi			86						
140	98				91						
145	102				95						
150	106				100						
155	109				104						
160	113				109						
165	116				114						
170	120				119						
175	123				124						
179	126	Max.395mm			128						
180	126	Min.290mm	CNPA150-125-370X2	2350	123					NM4-101C-EC	130
185	130	UL: - psi FM: - psi			127						
190	133				130						
195	137				134					NM6-101-EC	201
200	140				138						
205	144				142						
210	147				146						
215	151				150						
220	155				154						
225	158				158						
230	162				162						
235	165				166						
240	169				171						
245	172				175						
250	176				179						
255	179				183						
260	183				187						
265	186				192						
270	190				196						
275	193				200						
280	197				204					NM6-108F-EC	265
285	200				208						
290	204				213						
295	207				217						
300	211				222						
305	214				226						
310	218	Max.370mm			230						

The contents of this publication must not be regarded as binding. EBARA E NGINEERING SINGAPORE PTE. LTD. reserves the right to effect any modification it deems necessary, without prior notice.

EBARA CNPAx DOUBLE SUCTION HORIZONTAL SPLIT CASE CENTRIFUGAL
UL LISTED/FM APPROVED FIRE PUMPS DRIVRE SELECTION TABLE

UL LISTED

FM APPROVED

PREV

RATED FLOW: 750us.gpm(170m3/h)

NEXT

HEAD (UL&FM)		IMPELLER	PUMP (UL&FM)	SPEED	MAX SHAFT POWER	MOTOR DRIVER (UL)		DIESEL ENGINE DRIVER (UL/FM/T3)			
psi	meter	Dia.mm	MODEL CNPAx	rpm	hp	MODEL NEMA SF:1.15 ODP/TEFC	hp	MODEL (UL&FM)	hp	MODEL (UL/T3)	hp
89	63	Min.248mm	CNPA150-125-250	2600	61					CFP5E-F10	104
90	63	UL:89~121psi FM:89~123psi			62						
95	67				66						
100	70				71						
105	74				75						
110	77				80						
115	81				84						
120	84				89						
123	87	Max.285mm			92						
130	91	Min.302mm	CNPA150-125-310	2600	103					CFP5E-F10	104
135	95	UL:130~153psi FM:132~152psi			107					CFP5E-F20	117
140	98				112						
144	101	Max.326mm			116						
145	102	Min.342mm	CNPA125-80-350	2600	91					CFP5E-F10	104
145	102				91						
150	106	UL:145~217psi FM:146~219psi			95						
155	109				100						
160	113				104						
165	116				109					CFP5E-F20	117
170	120				114						
175	123				119					CFP5E-F30	129
180	127				125						
185	130				131					CFP5E-F40	141
190	134				137						
195	137				142					CFP5E-F50	148
200	141				147						
205	144				151					CFP7E-F10	174
210	148				156						
215	151				160						
219	154	Max.395mm			163						
57	40	Min.177mm	CNPA150-125-200	2950	50	F-TDC324TS50U2B /F-TXC326TS50U2B	50	NM4-90B	61	NM4-90	51
60	42	UL: - psi FM: - psi			52					NM4-105	86
65	46				56						
70	49				60	F-TDC326TS60U2B /F-TXC364TS60U2B	60				
75	53				64			NM4-102C	75		
80	56				69						
85	60				73	F-TDC365TS75U2B /F-TXC365TS75U2B	75				
90	63				77						
95	67				81			NM4-102B	95		
100	70				86						
105	74	Max.230mm			90	F-TDC365TS100U2B /F-TXC405TS100U2B	100			NM4-108B	121
106	75	Min.245mm	CNPA125-80-250	2950	64	F-TDC326TS60U2B /F-TXC364TS60U2B	60	NM4-102C	75	NM4-105	86
110	77	UL:108~120psi FM:106~118psi			67						
115	81				70	F-TDC365TS75U2B /F-TXC365TS75U2B	75				
120	84	Max.253mm			73						
121	85	Min.250mm	CNPA125-100-300	2980	83	F-TDC365TS75U2B /F-TXC365TS75U2B	75	NM4-102B	95	NM4-105	86
125	88	UL:104~163psi FM:104~163psi			86						
130	91				89	F-TDC365TS100U2B /F-TXC405TS100U2B	100			NM4-108	94
135	95				92						
140	98				95						
145	102				98			NM4-108B	117	NM4-108B	121
150	106				101						
155	109				103						
160	113				106						
163	115	Max.326mm			107						

The contents of this publication must not be regarded as binding. EBARA ENGINEERING SINGAPORE PTE. LTD. reserves the right to effect any modification it deems necessary, without prior notice.

EBARA CNPAx DOUBLE SUCTION HORIZONTAL SPLIT CASE CENTRIFUGAL
UL LISTED/FM APPROVED FIRE PUMPS DRIVRE SELECTION TABLE

UL LISTED

FM APPROVED

PREV

RATED FLOW: 750us.gpm(170m3/h)

NEXT

HEAD (UL&FM)		IMPELLER	PUMP (UL&FM)	SPEED	MAX SHAFT POWER	MOTOR DRIVER (UL)		DIESEL ENGINE DRIVER (UL/FM/T3)			
psi	meter	Dia.mm	MODEL CNPAx	rpm	hp	MODEL NEMA SF:1.15 ODP/TEFC	hp	MODEL (UL&FM)	hp	MODEL (UL/T3)	hp
164	115	Min.320mm	CNPA125-80-350	2950	108	F-TDC365TS100U2B /F-TXC405TS100U2B	100	NM4-108B	117	NM4-108B	121
170	120	UL:167~286psi FM:164~283psi			112						
175	123				116	F-TDC404TS125U2B /F-TXC444TS125U2B	125				
180	127				120			NM6-110B	148	NM6-110B	153
185	130				125						
190	134				129						
195	137				134						
200	141				139						
205	144				143						
210	148				149	F-TDC405TS150U2B /F-TXC445TS150U2B	150				
215	151				154			NM6-110E	192	NM6-110E	192
220	155				160						
225	158				166						
230	162				172						
235	165				178	F-TDC444TS200U2B /F-TXC447TS200U2B	200				
240	169				185						
245	172				192						
250	176				199			NM6-110D	239	NM6-110D	268
255	179				206						
260	183				213						
265	186				221						
270	190				229						
275	193				237	F-TDC449TS250U2B /F-TXC449TS250U2B	250	NM6-108E	335	NM6-108E	335
280	197				246						
285	200				255						
286	201	Max.395mm			257						
287	202	Min.300mm	CNPA125-100-330X2	2950	184	F-TDC444TS200U2B /F-TXC447TS200U2B	200	NM6-110D	239	NM6-110D	268
290	204	UL:280~368psi FM:282~373psi			186						
295	208				189						
300	211				192						
305	215				195						
310	218				198						
315	222				202						
320	225				205						
325	229				209						
330	232				213						
335	236				217						
340	239				220						
345	243				224						
350	246				229						
355	250				233	F-TDC449TS250U2B /F-TXC449TS250U2B	250	NM6-108E	335	NM6-108E	335
360	253				237						
365	257				242						
370	260				247						
373	262	Max.334mm			250						

The contents of this publication must not be regarded as binding. EBARA ENGINEERING SINGAPORE PTE. LTD. reserves the right to effect any modification it deems necessary, without prior notice.

EBARA CNPAx DOUBLE SUCTION HORIZONTAL SPLIT CASE CENTRIFUGAL
UL LISTED/FM APPROVED FIRE PUMPS DRIVRE SELECTION TABLE

UL LISTED

FM APPROVED

PREV

RATED FLOW: 750us.gpm(170m3/h)

NEXT

HEAD (UL&FM)		IMPELLER	PUMP (UL&FM)	SPEED	MAX SHAFT POWER	MOTOR DRIVER (UL)		DIESEL ENGINE DRIVER (UL/FM/T3)			
psi	meter	Dia.mm	MODEL CNPAx	rpm	hp	MODEL NEMA SF:1.15 ODP/TEFC	hp	MODEL (UL&FM)	hp	MODEL (UL/T3)	hp
374	263	Min.310mm	CNPA150-125-370X2	2950	297	F-TDC447TS300U2B /F-TXC449TS300U2B	300	NM6-108E	335	NM6-108E	335
375	264	UL: - psi FM: - psi			298						
380	267				304						
385	271				309						
390	274				315						
395	278				321						
400	281				326						
405	285				332						
410	288				338						
415	292				344						
420	295				350	F-TDC449TS350U2B /F-TXC586/7TS350U2B	350				
425	299				355						
430	302				361						
435	306				367						
440	310				373						
445	313				379						
450	317				385						
455	320				391						
460	324				397						
465	327				403	F-TDC449TS400U2B /F-TXC586/7TS400U2B	400				
470	331				409						
475	334				415						
480	338				421						
485	341				428						
490	345				434						
495	348				440						
500	352				446						
505	355				453						
510	359				459						
515	362	Max.370mm			465	F-TDC449TS450U2B /F-TXC586/7TS450U2B	450				
40	28	Min.244mm	CNPA200-150-330	1760	34	F-TDC286T30U4B /F-TXC286T30U4B	30	NM6-105B	204	NM6-101-EC	180
45	32	UL:40~77psi FM:40~78psi			39	F-TDC324T40U4B /F-TXC324T40U4B	40				
50	35				45						
55	39				51	F-TDC326T50U4B /F-TXC326T50U4B	50				
60	42				57						
65	46				64	F-TDC364T60U4B /F-TXC364T60U4B	60				
70	49				71	F-TDC365T75U4B /F-TXC365T75U4B	75				
75	53				78						
78	55	Max.339mm			81						
66	46	Min.163mm	CNPA125-80-200	3550	43	F-TDC286TS40U2B /F-TXC324TS40U2B	40				
70	49	UL:66~103psi FM:66~103psi			46						
75	53				51	F-TDC324TS50U2B /F-TXC326TS50U2B	50				
80	56				55						
85	60				58	F-TDC326TS60U2B /F-TXC364TS60U2B	60				
90	63				62						
95	67				65						
100	70				68						
103	72	Max.204mm			70	F-TDC365TS75U2B /F-TXC365TS75U2B	75				

The contents of this publication must not be regarded as binding. EBARA ENGINEERING SINGAPORE PTE. LTD. reserves the right to effect any modification it deems necessary, without prior notice.

EBARA CNPAx DOUBLE SUCTION HORIZONTAL SPLIT CASE CENTRIFUGAL
UL LISTED/FM APPROVED FIRE PUMPS DRIVRE SELECTION TABLE

UL LISTED

FM APPROVED

PREV

RATED FLOW: 750us.gpm(170m3/h)

NEXT

HEAD (UL&FM)		IMPELLER	PUMP (UL&FM)	SPEED	MAX SHAFT POWER	MOTOR DRIVER (UL)		DIESEL ENGINE DRIVER (UL/FM/T3)			
psi	meter	Dia.mm	MODEL CNPAx	rpm	hp	MODEL NEMA SF:1.15 ODP/TEFC	hp	MODEL (UL&FM)	hp	MODEL (UL/T3)	hp
104	73	Min.200mm	CNPA125-80-250	3550	64	F-TDC326TS60U2B /F-TXC364TS60U2B	60				
105	74	UL:105~185psi FM:105~183psi			64						
110	77				67						
115	81				71	F-TDC365TS75U2B /F-TXC365TS75U2B	75				
120	84				74						
125	88				78						
130	91				82						
135	95				86						
140	98				89	F-TDC365TS100U2B /F-TXC405TS100U2B	100				
145	102				93						
150	106				97						
155	109				101						
160	113				105						
165	116				109						
170	120				113						
175	123				117	F-TDC404TS125U2B /F-TXC444TS125U2B	125				
180	127				122						
183	129	Max.253mm			124						
184	129	Min.250mm	CNPA125-100-300	3550	142	F-TDC405TS150U2B /F-TXC445TS150U2B	150				
190	134	UL:157~247psi FM:157~247psi			146						
195	137				149						
200	141				153						
205	144				156						
210	148				159						
215	151				162						
220	155				165						
225	158				168						
230	162				171						
235	165				174	F-TDC444TS200U2B /F-TXC447TS200U2B	200				
240	169				177						
245	172				180						
247	174	Max.315mm			181						
251	177	Min.320mm	CNPA125-80-350	3550	198	F-TDC444TS200U2B /F-TXC447TS200U2B	200				
255	179	UL:254~292psi FM:251~289psi			201						
260	183				205						
265	186				209						
270	190				213						
275	193				216						
280	197				220						
285	200				224						
290	204				228						
292	205	Max.342mm			230						

The contents of this publication must not be regarded as binding. EBARA E NGINEERING SINGAPORE PTE. LTD. reserves the right to effect any modification it deems necessary, without prior notice.

EBARA CNPAx DOUBLE SUCTION HORIZONTAL SPLIT CASE CENTRIFUGAL
UL LISTED/FM APPROVED FIRE PUMPS DRIVRE SELECTION TABLE

UL LISTED

FM APPROVED

PREV

RATED FLOW: 750us.gpm(170m3/h)

NEXT

HEAD (UL&FM)		IMPELLER	PUMP (UL&FM)	SPEED	MAX SHAFT POWER	MOTOR DRIVER (UL)		DIESEL ENGINE DRIVER (UL/FM/T3)			
psi	meter	Dia.mm	MODEL CNPAx	rpm	hp	MODEL NEMA SF:1.15 ODP/TEFC	hp	MODEL (UL&FM)	hp	MODEL (UL/T3)	hp
312	219	Min.260mm	CNPA125-100-330X2	3550	218	F-TDC444TS200U2B /F-TXC447TS200U2B	200				
315	222	UL:312~574psi FM:313~564psi			220						
320	225				223						
325	229				226						
330	232				229						
335	236				233	F-TDC449TS250U2B /F-TXC449TS250U2B	250				
340	239				236						
345	243				239						
350	246				243						
355	250				246						
360	253				249						
365	257				253						
370	260				256						
375	264				260						
380	267				264						
385	271				268						
390	274				271						
395	278				275						
400	281				279						
405	285				283						
410	288				286						
415	292				290	F-TDC447TS300U2B /F-TXC449TS300U2B	300				
420	295				294						
425	299				298						
430	302				303						
435	306				307						
440	310				311						
445	313				315						
450	317				320						
455	320				324						
460	324				329						
465	327				334						
470	331				338						
475	334				343						
480	338				348	F-TDC449TS350U2B /F-TXC586/7TS350U2B	350				
485	341				353						
490	345				358						
495	348				363						
500	352				367						
505	355				373						
510	359				378						
515	362				383						
520	366				389						
525	369				394						
530	373				400						
535	376				405	F-TXC586/7TS400U2B	400				
540	380				411						
545	383				416						
550	387				423						
555	390				428						
560	394				435						
565	397				440						
570	401				446						
574	404	Max.334mm			451						

The contents of this publication must not be regarded as binding. EBARA E NGINEERING SINGAPORE PTE. LTD. reserves the right to effect any modification it deems necessary, without prior notice.

EBARA CNPAx DOUBLE SUCTION HORIZONTAL SPLIT CASE CENTRIFUGAL UL LISTED/FM APPROVED FIRE PUMPS DRIVRE SELECTION TABLE

UL LISTED

FM APPROVED

PREV

RATED FLOW: 750us.gpm(170m3/h)

HEAD (UL&FM)		IMPELLER	PUMP (UL&FM)	SPEED	MAX SHAFT POWER	MOTOR DRIVER (UL)		DIESEL ENGINE DRIVER (UL/FM/T3)			
psi	meter	Dia.mm	MODEL CNPAx	rpm	hp	MODEL NEMA SF:1.15 ODP/TEFC	hp	MODEL (UL&FM)	hp	MODEL (UL/T3)	hp
263	185	Min.430mm	CNPA200-150-450x2	1800	265	F-TDC447T250U4B /F-TXC449T250U4B	250	NM6-114B	280	NM6-108G-EC	296
265	186	UL:263~361psi FM:263~361psi			268						
270	190				277						
275	193				285			NM6-114D	296		
280	197				293	F-TDC449T300U4B /F-TXC449T300U4B	300				
285	200				301			NM6-135B	338	NM6-132-EC	435
290	204				309						
295	208				317						
300	211				324						
305	215				331						
310	218				338						
315	222				345			NM6-135	375		
320	225				351	F-TDC449T350U4B /F-TXC587T350U4B	350				
325	229				357						
330	232				363						
335	236				368						
340	239				374						
345	243				379			NM6-128B	396		
350	246				384						
355	250				389						
361	254	Max.500mm			395						

The contents of this publication must not be regarded as binding. EBARA E NGINEERING SINGAPORE PTE. LTD. reserves the right to effect any modification it deems necessary, without prior notice.

EBARA CNPAx DOUBLE SUCTION HORIZONTAL SPLIT CASE CENTRIFUGAL
UL LISTED/FM APPROVED FIRE PUMPS DRIVRE SELECTION TABLE

UL LISTED

FM APPROVED

RATED FLOW: 1000us.gpm(227m3/h)

NEXT

HEAD (UL&FM)		IMPELLER	PUMP (UL&FM)	SPEED	MAX SHAFT POWER	MOTOR DRIVER (UL)		DIESEL ENGINE DRIVER (UL/FM/T3)			
psi	meter	Dia.mm	MODEL CNPAx	rpm	hp	MODEL NEMA SF:1.15 ODP/TEFC	hp	MODEL (UL&FM)	hp	MODEL (UL/T3)	hp
57	40	Min.220mm	CNPA200-150-310	2350	55					NM4-101C-EC	130
60	42	UL:55~87psi FM:54~86psi			58						
65	46				62						
70	49				67						
75	53				71						
80	56				76						
85	60				81						
90	63				86						
95	67				91						
100	70				96						
105	74				101						
110	77				106						
115	81				111						
120	84				117						
125	88				122						
130	91				128						
135	95				135					NM6-101-EC	201
140	98				143						
145	102				150						
147	103	Max.335mm			154						
72	51	Min.220mm	CNPA200-150-310	2600	69					CFP5E-F10	104
75	53	UL:73~181psi FM:72~176psi			72						
80	56				78						
85	60				84						
90	63				90						
95	67				96						
100	70				102						
105	74				108					CFP5E-F20	117
110	77				113						
115	81				119					CFP5E-F30	129
120	84				125						
125	88				130					CFP5E-F40	141
130	91				136						
135	95				141						
140	98				147					CFP5E-F50	148
145	102				153					CFP7E-F10	172
150	106				160						
155	109				167						
160	113				174					CFP7E-F20	189
165	116				182						
170	120				190					CFP7E-F30	204
175	123				198						
180	127				208					CFP7E-F40	219
181	127	Max.335mm			211						
70	49	Min.200mm	CNPA150-125-200	2950	65	F-TDC326TS60U2B /F-TXC364TS60U2B	60	NM4-102C	75	NM4-105	86
75	53	UL: - psi FM: - psi			69						
80	56				73	F-TDC365TS75U2B /F-TXC365TS75U2B	75				
85	60				77						
90	63				81			NM4-102B	95		
95	67				85						
98	69	Max.230mm			87	F-TDC365TS100U2B /F-TXC405TS100U2B	100			NM4-108B	121

The contents of this publication must not be regarded as binding. EBARA ENGINEERING SINGAPORE PTE. LTD. reserves the right to effect any modification it deems necessary, without prior notice.

EBARA CNPAx DOUBLE SUCTION HORIZONTAL SPLIT CASE CENTRIFUGAL
UL LISTED/FM APPROVED FIRE PUMPS DRIVRE SELECTION TABLE

UL LISTED

FM APPROVED

PREV

RATED FLOW: 1000us.gpm(227m3/h)

NEXT

HEAD (UL&FM)		IMPELLER	PUMP (UL&FM)	SPEED	MAX SHAFT POWER	MOTOR DRIVER (UL)		DIESEL ENGINE DRIVER (UL/FM/T3)			
psi	meter	Dia.mm	MODEL CNPAx	rpm	hp	MODEL NEMA SF:1.15 ODP/TEFC	hp	MODEL (UL&FM)	hp	MODEL (UL/T3)	hp
99	70	Min.245mm	CNPA150-125-250	UL: 2980 FM: 2950	82	F-TDC365TS75U2B /F-TXC365TS75U2B	75	NM4-102B	95	NM4-105	86
100	70	UL:103~151psi FM:99~148psi			83						
105	74				88	F-TDC365TS100U2B /F-TXC405TS100U2B	100			NM4-108	94
110	77				93						
115	81				99			NM4-108B	117	NM4-108B	121
120	84				104						
125	88				110						
130	91				116	F-TDC404TS125U2B /F-TXC444TS125U2B	125				
135	95				122			NM6-110B	148	NM6-110B	153
140	98				128						
145	102				134						
148	104	Max.285mm			138						
149	105	Min.280mm	CNPA150-125-310	UL: 2980 FM: 2950	135	F-TDC404TS125U2B /F-TXC444TS125U2B	125	NM6-110B	148	NM6-110B	153
155	109	UL:121~192psi FM:138~187psi			141						
160	113				146	F-TDC405TS150U2B /F-TXC445TS150U2B	150				
165	116				150			NM6-110E	192	NM6-110E	192
170	120				155						
175	123				159						
180	127				163						
185	130				167						
188	132	Max.325mm			169			NM6-108E	335	NM6-108E	335
189	133	Min.340mm	CNPA150-125-400	UL: 2980 FM: 2950	162	F-TDC405TS150U2B /F-TXC445TS150U2B	150	NM6-110E	192	NM6-110E	192
195	137	UL:192~265psi FM:189~257psi			168						
200	141				174	F-TDC444TS200U2B /F-TXC447TS200U2B	200	NM6-110D	239	NM6-110D	268
205	144				180						
210	148				186						
216	152	Max.396mm			193						
217	153	Min.370mm	CNPA125-80-350	2950	180	F-TDC444TS200U2B /F-TXC447TS200U2B	200	NM6-110D	239	NM6-110D	268
220	155	UL:220~270psi FM:217~265psi			183						
225	158				190						
230	162				196						
235	165				203						
240	169				210						
245	172				217						
250	176				225						
255	179				233	F-TDC449TS250U2B /F-TXC449TS250U2B	250	NM6-108E	335	NM6-108E	335
260	183				241						
265	186				249						
270	190	Max.395mm			257						
271	191	Min.385mm	CNPA200-150-420	2950	271	F-TDC449TS250U2B /F-TXC449TS250U2B	250	NM6-108E	335	NM6-108E	335
275	193	UL:260~359psi FM:259~358psi			278						
280	197				287						
285	200				296	F-TDC447TS300U2B /F-TXC449TS300U2B	300				
290	204				305						
295	208				314						
300	211				323						
304	214	Max.440mm			329						

The contents of this publication must not be regarded as binding. EBARA E NGINEERING SINGAPORE PTE. LTD. reserves the right to effect any modification it deems necessary, without prior notice.

EBARA CNPAx DOUBLE SUCTION HORIZONTAL SPLIT CASE CENTRIFUGAL
UL LISTED/FM APPROVED FIRE PUMPS DRIVRE SELECTION TABLE

UL LISTED

FM APPROVED

PREV

RATED FLOW: 1000us.gpm(227m3/h)

NEXT

HEAD (UL&FM)		IMPELLER	PUMP (UL&FM)	SPEED	MAX SHAFT POWER	MOTOR DRIVER (UL)		DIESEL ENGINE DRIVER (UL/FM/T3)			
psi	meter	Dia.mm	MODEL CNPAx	rpm	hp	MODEL NEMA SF:1.15 ODP/TEFC	hp	MODEL (UL&FM)	hp	MODEL (UL/T3)	hp
305	215	Min.310mm	CNPA150-125-370X2	2950	261	F-TDC449TS250U2B /F-TXC449TS250U2B	250	NM6-108E	335	NM6-110D	268
310	218	UL: - psi FM: - psi			264					NM6-108E	335
315	222				269						
320	225				274						
325	229				279						
330	232				284						
335	236				290	F-TDC447TS300U2B /F-TXC449TS300U2B	300				
340	239				295						
345	243				300						
350	246				306						
355	250				311						
360	253				317						
365	257				322						
370	260				328						
375	264				334						
380	267				339						
385	271				345						
390	274				351	F-TDC449TS350U2B /F-TXC586/7TS350U2B	350				
395	278				356						
400	281				362						
405	285				368						
410	288				374						
415	292				380						
420	295				385						
425	299				391	F-TDC449TS400U2B /F-TXC586/7TS400U2B	400				
430	302				397						
435	306				403						
440	310				409						
445	313				415						
450	317				422						
455	320				428						
460	324				434						
465	327				440						
470	331				446						
475	334				453						
480	338				459						
485	341	Max.370mm			465	F-TDC449TS450U2B /F-TXC586/7TS450U2B	450				
40	28	Min.244mm	CNPA200-150-330	1760	37	F-TDC324T40U4B /F-TXC324T40U4B	40	NM6-105B	204	NM6-101-EC	180
45	32	UL:40~74psi FM:40~75psi			43						
50	35				49	F-TDC326T50U4B /F-TXC326T50U4B	50				
55	39				55						
60	42				62	F-TDC364T60U4B /F-TXC364T60U4B	60				
65	46				68						
70	49				75	F-TDC365T75U4B /F-TXC365T75U4B	75				
75	53	Max.339mm			82						
79	56	Min.177mm	CNPA150-125-200	3550	79	F-TDC365TS75U2B /F-TXC365TS75U2B	75				
80	56	UL:79~145psi FM:80~146psi			80						
85	60				86						
90	63				91	F-TDC365TS100U2B /F-TXC405TS100U2B	100				
95	67				96						
100	70				101						
105	74				106						
110	77				110						
115	81				114						
120	84				117	F-TDC404TS125U2B /F-TXC444TS125U2B	125				
125	88				123						
129	91	Max.230mm			128						

The contents of this publication must not be regarded as binding. EBARA ENGINEERING SINGAPORE PTE. LTD. reserves the right to effect any modification it deems necessary, without prior notice.

EBARA CNPAx DOUBLE SUCTION HORIZONTAL SPLIT CASE CENTRIFUGAL
UL LISTED/FM APPROVED FIRE PUMPS DRIVRE SELECTION TABLE

UL LISTED

FM APPROVED

PREV

RATED FLOW: 1000us.gpm(227m3/h)

HEAD (UL&FM)		IMPELLER	PUMP (UL&FM)	SPEED	MAX SHAFT POWER	MOTOR DRIVER (UL)		DIESEL ENGINE DRIVER (UL/FM/T3)			
psi	meter	Dia.mm	MODEL CNPAx	rpm	hp	MODEL NEMA SF:1.15 ODP/TEFC	hp	MODEL (UL&FM)	hp	MODEL (UL/T3)	hp
130	91	Min.220mm	CNPA150-125-250	3550	118	F-TDC404TS125U2B /F-TXC444TS125U2B	125				
135	95	UL:130~225psi FM:130~223psi			123						
140	98				129						
145	102				135						
150	106				140						
155	109				146	F-TDC405TS150U2B /F-TXC445TS150U2B	150				
160	113				152						
165	116				157						
170	120				164						
175	123				170						
180	127				176	F-TDC444TS200U2B /F-TXC447TS200U2B	200				
185	130				182						
190	134				188						
195	137				194						
200	141				200						
205	144				206						
210	148				212						
215	151				218						
220	155				224						
223	157	Max.285mm			227						
224	158	Min.280mm	CNPA150-125-310	3550	234	F-TDC449TS250U2B /F-TXC449TS250U2B	250				
230	162	UL:182~283psi FM:211~283psi			241						
235	165				247						
240	169				253						
245	172				259						
250	176				265						
255	179				270						
260	183				275						
265	186				279						
270	190				283						
275	193				287						
280	197				292	F-TDC447TS300U2B /F-TXC449TS300U2B	300				
283	199	Max.325mm			296						
253	178	Min.430mm	CNPA200-150-450x2	1800	265	F-TDC447T250U4B /F-TXC449T250U4B	250	NM6-114B	280	NM6-108G-EC	296
255	179	UL:253~354psi FM:253~354psi			268						
260	183				276						
265	186				284			NM6-114D	298		
270	190				292	F-TDC449T300U4B /F-TXC449T300U4B	300				
275	193				300			NM6-135B	338	NM6-132-EC	435
280	197				307						
285	200				315						
290	204				322						
295	208				329						
300	211				336						
305	215				343						
310	218				349	F-TDC449T350U4B /F-TXC587T350U4B	350	NM6-135	375		
315	222				355						
320	225				361						
325	229				367						
330	232				372						
335	236				377			NM6-128B	396		
340	239				382						
345	243				387						
350	246				391						
354	249	Max.500mm			395						

The contents of this publication must not be regarded as binding. EBARA E NGINEERING SINGAPORE PTE. LTD. reserves the right to effect any modification it deems necessary, without prior notice.

EBARA CNPAx DOUBLE SUCTION HORIZONTAL SPLIT CASE CENTRIFUGAL UL LISTED/FM APPROVED FIRE PUMPS DRIVRE SELECTION TABLE

UL LISTED

FM APPROVED

RATED FLOW: 1250us.gpm(284m3/h)

NEXT

HEAD (UL&FM)		IMPELLER	PUMP (UL&FM)	SPEED	MAX SHAFT POWER	MOTOR DRIVER (UL)		DIESEL ENGINE DRIVER (UL/FM/T3)			
psi	meter	Dia.mm	MODEL CNPAx	rpm	hp	MODEL NEMA SF:1.15 ODP/TEFC	hp	MODEL (UL&FM)	hp	MODEL (UL/T3)	hp
74	52	Min.256mm	CNPA200-150-310	2350	78					NM4-101C-EC	130
80	56	UL:55~87psi FM:54~86psi			83						
85	60				88						
90	63				93						
95	67				98						
100	70				103						
105	74				108						
110	77				114						
115	81				120						
120	84				126						
125	88				132					NM6-101-EC	201
130	91				139						
135	95				146						
141	99	Max.335mm			154						
95	67	Min.256mm	CNPA200-150-310	2600	104					CFP5E-F20	117
100	70	UL:96-177psi FM:95-172psi			110						
105	74				116						
110	77				121					CFP5E-F30	129
115	81				127						
120	84				132					CFP5E-F40	141
125	88				138						
130	91				143					CFP5E-F50	148
135	95				150					CFP7E-F10	172
140	98				156						
145	102				162						
150	106				169						
155	109				176					CFP7E-F20	189
160	113				182						
165	116				190					CFP7E-F30	204
170	120				198						
175	123				207					CFP7E-F40	219
177	125	Max.335mm			211						
113	79	Min.500/488mm	CNPA200-150-600	1480	171	F-TDC445T200U4B /F-TXC447T200U4B	200	NM6-105B	188	NM6-105B	188
115	81	UL:113-192psi FM:114-193psi			175						
120	84				184						
125	88				194			NM6-114C	194	NM6-114C	194
130	91				204			NM6-114B	244	NM6-114B	244
135	95				214						
140	98				224						
145	102				235	F-TDC447T250U4B /F-TXC449T250U4B	250				
150	106				245			NM6-114D	250	NM6-114D	250
155	109				256			NM6-135B	340	NM6-135B	340
160	113				268						
165	116				279						
170	120				293	F-TDC449T300U4B /F-TXC449T300U4B	300				
175	123				308						
180	127				324						
185	130				342			NM6-128B	346	NM6-128B	346
190	134				361	F-TDC449T350U4B /F-TXC586/7T350U4B	350	NM6-127	436	NM6-127	436
193	136	Max.628mm			373			NM6-159C	450	NM6-159C	450

The contents of this publication must not be regarded as binding. EBARA ENGINEERING SINGAPORE PTE. LTD. reserves the right to effect any modification it deems necessary, without prior notice.

EBARA CNPAx DOUBLE SUCTION HORIZONTAL SPLIT CASE CENTRIFUGAL
UL LISTED/FM APPROVED FIRE PUMPS DRIVRE SELECTION TABLE

UL LISTED

FM APPROVED

PREV

RATED FLOW: 1250us.gpm(284m3/h)

NEXT

HEAD (UL&FM)		IMPELLER	PUMP (UL&FM)	SPEED	MAX SHAFT POWER	MOTOR DRIVER (UL)		DIESEL ENGINE DRIVER (UL/FM/T3)			
psi	meter	Dia.mm	MODEL CNPAx	rpm	hp	MODEL NEMA SF:1.15 ODP/TEFC	hp	MODEL (UL&FM)	hp	MODEL (UL/T3)	hp
83	58	Min.233mm	CNPA200-150-250	2950	84	F-TDC365TS75U2B /F-TXC365TS75U2B	75	NM4-102B	95	NM4-105	86
85	60	UL:83-149psi FM:83-149psi			86						
90	63				92	F-TDC365TS100U2B /F-TXC405TS100U2B	100			NM4-108	94
95	67				98			NM4-108B	117	NM4-108B	121
100	70				104						
105	74				110						
110	77				116	F-TDC404TS125U2B /F-TXC444TS125U2B	125				
115	81				122			NM6-110B	148	NM6-110B	153
120	84				129						
125	88				135						
130	91				142						
135	95				149	F-TDC405TS150U2B /F-TXC445TS150U2B	150	NM6-110E	192		
140	98	Max.300mm			155					NM6-110E	192
141	99	Min.240mm	CNPA200-150-310	2980	163	F-TDC405TS150U2B /F-TXC445TS150U2B	150	NM6-110E	192	NM6-110E	192
145	102	UL:112-230psi FM:112-232psi			167						
150	106				174	F-TDC444TS200U2B /F-TXC447TS200U2B	200				
155	109				180						
160	113				189			NM6-110D	239	NM6-110D	268
165	116				196						
170	120				204						
175	123				212						
180	127				221						
185	130				230						
190	134				237	F-TDC449TS250U2B /F-TXC449TS250U2B	250				
195	137				244			NM6-108E	335		
200	141				251						
205	144				258						
210	148				265						
215	151				272					NM6-108E	335
220	155				279						
225	158				285						
230	162				292	F-TDC447TS300U2B /F-TXC449TS300U2B	300				
232	163	Max.335mm			295						
240	169	Min.385mm	CNPA200-150-420	2950	252	F-TDC449TS250U2B /F-TXC449TS250U2B	250	NM6-108E	335	NM6-110D	268
245	172	UL:241-346psi FM:240-345psi			260						
250	176				267						
255	179				275					NM6-108E	335
260	183				284						
265	186				292	F-TDC447TS300U2B /F-TXC449TS300U2B	300				
270	190				300						
275	193				309						
280	197				317						
285	200				325						
290	204				334						
295	208				343						
300	211				351	F-TDC447TS350U2B /F-TXC586/7TS350U2B	350				
305	215				360						
310	218				368						
315	222				377						
320	225				386						
325	229				395						
330	232				403	F-TDC449TS400U2B /F-TXC586/7TS400U2B	400				
335	236				413						
340	239				421						
346	243	Max.440mm			432						

The contents of this publication must not be regarded as binding. EBARA E NGINEERING SINGAPORE PTE. LTD. reserves the right to effect any modification it deems necessary, without prior notice.

EBARA CNPAx DOUBLE SUCTION HORIZONTAL SPLIT CASE CENTRIFUGAL
UL LISTED/FM APPROVED FIRE PUMPS DRIVRE SELECTION TABLE

UL LISTED

FM APPROVED

PREV

RATED FLOW: 1250us.gpm(284m3/h)

NEXT

HEAD (UL&FM)		IMPELLER	PUMP (UL&FM)	SPEED	MAX SHAFT POWER	MOTOR DRIVER (UL)		DIESEL ENGINE DRIVER (UL/FM/T3)			
psi	meter	Dia.mm	MODEL CNPAx	rpm	hp	MODEL NEMA SF:1.15 ODP/TEFC	hp	MODEL (UL&FM)	hp	MODEL (UL/T3)	hp
105	74	Min.202mm	CNPA200-150-250G	3550	154	F-TDC405TS150U2B /F-TXC445TS150U2B	150				
112	79	UL: - psi FM: - psi			156						
120	84				168						
127	89				177	F-TDC444TS200U2B /F-TXC447TS200U2B	200				
132	95	Max.225mm			185						
133	94	Min.233mm	CNPA200-150-250	3550	145	F-TDC405TS150U2B /F-TXC445TS150U2B	150				
135	95	UL:133-225psi FM:133-224psi			148						
140	98				155						
145	102				162						
150	106				169						
155	109				177	F-TDC444TS200U2B /F-TXC447TS200U2B	200				
160	113				185						
165	116				193						
170	120				200						
175	123				208						
180	127				217						
185	130				225						
190	134				233	F-TDC449TS250U2B /F-TXC449TS250U2B	250				
195	137				242						
200	141				250						
205	144				259						
210	148				268						
215	151				277						
220	155	Max.300mm			287						
221	155	Min.240mm	CNPA200-150-310	3550	280	F-TDC449TS250U2B /F-TXC449TS250U2B	250				
225	158	UL:168~281psi FM:168~247psi			285						
230	162				291	F-TDC447TS300U2B /F-TXC449TS300U2B	300				
235	165				297						
240	169				303						
245	172				309						
247	174				311						
248	174				312						
250	176				314						
255	179				320						
260	183				324						
265	186				329						
270	190				334						
275	193				339						
280	197				344						
281	198	Max.310mm			345						
70	49	Min.326mm	CNPA200-150-375	1760	74	F-TDC365T75U4B /F-TXC365T75U4B	75	NM6-105B	204	NM6-101-EC	180
75	53	UL:70-131psi FM:70-131psi			79						
80	56				85						
85	60				91	F-TDC405T100U4B /F-TXC405T100U4B	100				
90	63				99						
95	67				107						
100	70				115						
105	74				124	F-TDC405T125U4B /F-TXC444T125U4B	125				
110	77				134						
115	81				145	F-TDC444T150U4B /F-TXC445T150U4B	150				
120	84				157						
125	88				174	F-TDC445T200U4B /F-TXC447T200U4B	200				
131	92	Max.416mm			200						

The contents of this publication must not be regarded as binding. EBARA ENGINEERING SINGAPORE PTE. LTD. reserves the right to effect any modification it deems necessary, without prior notice.

EBARA CNPAx DOUBLE SUCTION HORIZONTAL SPLIT CASE CENTRIFUGAL
UL LISTED/FM APPROVED FIRE PUMPS DRIVRE SELECTION TABLE

UL LISTED

FM APPROVED

PREV

RATED FLOW: 1250us.gpm(284m3/h)

HEAD (UL&FM)		IMPELLER	PUMP (UL&FM)	SPEED	MAX SHAFT POWER	MOTOR DRIVER (UL)		DIESEL ENGINE DRIVER (UL/FM/T3)			
psi	meter	Dia.mm	MODEL CNPAx	rpm	hp	MODEL NEMA SF:1.15 ODP/TEFC	hp	MODEL (UL&FM)	hp	MODEL (UL/T3)	hp
106	75	Min.326mm	CNPA200-150-375	2100	125			NM6-105B	208	NM6-101-EC	196
110	77	UL:106-188psi FM:106-187psi			131						
115	81				140						
120	84				148						
125	88				157						
130	91				166						
135	95				176						
140	98				185						
145	102				195						
150	106				205					NM6-108F-EC	260
155	109				215			NM6-114C	248		
160	113				225						
165	116				236						
170	120				247						
175	123				258			NM6-114B NM6-114D	305 329		
180	127				269					NM6-108G-EC	326
185	130				280						
187	132				285						
188	132	Max.416mm			288						
236	166	Min.430mm	CNPA200-150-450x2	1800	265	F-TDC447T250U4B /F-TXC449T250U4B	250	NM6-114B	280	NM6-108G-EC	296
240	169	UL:236-342psi FM:236-342psi			270						
245	172				278						
250	176				285						
256	180				292	F-TDC449T300U4B /F-TXC449T300U4B	300	NM6-114D	298		
260	183				298					NM6-132-EC	435
265	186				305			NM6-135B	338		
270	190				312						
275	193				319						
280	197				325						
285	200				332						
290	204				338						
295	208				345						
300	211				351	F-TDC449T350U4B /F-TXC586/7T350U4B	350	NM6-135	375		
305	215				357						
310	218				363						
315	222				368						
320	225				373						
325	229				379			NM6-128B	396		
330	232				384						
335	236				388						
340	239				393						
342	241	Max.500mm			395						

The contents of this publication must not be regarded as binding. EBARA E NGINEERING SINGAPORE PTE. LTD. reserves the right to effect any modification it deems necessary, without prior notice.

EBARA CNPAx DOUBLE SUCTION HORIZONTAL SPLIT CASE CENTRIFUGAL UL LISTED/FM APPROVED FIRE PUMPS DRIVRE SELECTION TABLE

UL LISTED

FM APPROVED

RATED FLOW: 1500us.gpm(341m3/h)

NEXT

HEAD (UL&FM)		IMPELLER	PUMP (UL&FM)	SPEED	MAX SHAFT POWER	MOTOR DRIVER (UL)		DIESEL ENGINE DRIVER (UL/FM/T3)			
psi	meter	Dia.mm	MODEL CNPAx	rpm	hp	MODEL NEMA SF:1.15 ODP/TEFC	hp	MODEL (UL&FM)	hp	MODEL (UL/T3)	hp
71	50	Min.260mm	CNPA200-150-330	2350	91					NM4-101C-EC	130
75	53	UL:55~87psi FM:54~86psi			97						
80	56				106						
85	60				114						
90	63				123						
95	67				132						
100	70				141					NM6-101-EC	201
105	74				151						
110	77				161						
115	81				171						
120	84				181						
125	88				192						
131	92	Max.339mm			205						
90	63	Min.260mm	CNPA200-150-330	2600	122					CFP5E-F30	129
95	67	UL:90-163psi			130					CFP5E-F40	141
100	70				138						
105	74				147					CFP5E-F50	148
110	77				156					CFP7E-F10	172
115	81				165						
120	84				174					CFP7E-F20	189
125	88				183						
130	91				192					CFP7E-F30	204
135	95				202						
140	98				211					CFP7E-F40	219
145	102				221					CFP7E-F50	234
150	106				231						
155	109				241					CFP7E-F60	249
160	113				252						
163	115	Max.339mm			258						
110	77	Min.500/488mm	CNPA200-150-600	1480	171	F-TDC445T200U4B /F-TXC447T200U4B	200	NM6-105B	188	NM6-105B	188
115	81	UL:110-191psi FM:111-191psi			181						
120	84				191			NM6-114C	194	NM6-114C	194
125	88				201			NM6-114B NM6-114D	244 250	NM6-114B NM6-114D	244 250
130	91				211						
135	95				221						
140	98				231	F-TDC447T250U4B /F-TXC449T250U4B	250				
145	102				242						
150	106				252			NM6-135B	340	NM6-135B	340
155	109				263						
160	113				274						
165	116				286						
170	120				300	F-TDC449T300U4B /F-TXC449T300U4B	300				
175	123				315						
180	127				332						
185	130				349	F-TDC449T350U4B /F-TXC586/7T350U4B	350	NM6-127 NM6-159C	436 450	NM6-127 NM6-159C	436 450
190	134				369						
191	134	Max.628mm			373						
192	135	Min.500mm	CNPA200-150-640	1480	393	F-TDC449T400U4B /F-TXC586/7T400U4B	400	NM6-127	436	NM6-127	436
195	137	UL:124~220psi FM:125~222psi			405						
200	141				426						
205	144				447			NM6-159C	450	NM6-159C	450
210	148				466	F-TXC586/7T450U4B	450	NM6-159	577	NM6-159 NM6-150	577 719
215	151				482						
220	155				494						
222	156	Max.664mm			497						

The contents of this publication must not be regarded as binding. EBARA ENGINEERING SINGAPORE PTE. LTD. reserves the right to effect any modification it deems necessary, without prior notice.

EBARA CNPAx DOUBLE SUCTION HORIZONTAL SPLIT CASE CENTRIFUGAL
UL LISTED/FM APPROVED FIRE PUMPS DRIVRE SELECTION TABLE

UL LISTED

FM APPROVED

PREV

RATED FLOW: 1500us.gpm(341m3/h)

NEXT

HEAD (UL&FM)		IMPELLER	PUMP (UL&FM)	SPEED	MAX SHAFT POWER	MOTOR DRIVER (UL)		DIESEL ENGINE DRIVER (UL/FM/T3)			
psi	meter	Dia.mm	MODEL CNPAx	rpm	hp	MODEL NEMA SF:1.15 ODP/TEFC	hp	MODEL (UL&FM)	hp	MODEL (UL/T3)	hp
91	64	Min.235mm	CNPA200-150-250G	2950	114	F-TDC365TS100U2B /F-TXC405TS100U2B	100	NM4-108B	117	NM4-108B	121
95	67	UL:91-140psi FM:91-139psi			120	F-TDC404TS125U2B /F-TXC444TS125U2B	125	NM6-110B	148	NM6-110B	153
100	70				128						
105	74				135						
110	77				143						
115	81				151	F-TDC405TS150U2B /F-TXC445TS150U2B	150	NM6-110E	192	NM6-110E	192
120	84				160						
125	88				168						
127	89	Max.286mm			171						
128	90	Min.256mm	CNPA200-150-310	2980	157	F-TDC405TS150U2B /F-TXC445TS150U2B	150	NM6-110E	192	NM6-110E	192
130	91	UL:109-221psi FM:123-222psi			159						
135	95				165						
140	98				172						
145	102				179	F-TDC444TS200U2B /F-TXC447TS200U2B	200				
150	106				186						
155	109				193			NM6-110D	239	NM6-110D	268
160	113				201						
165	116				209						
170	120				217						
175	123				226						
180	127				234	F-TDC449TS250U2B /F-TXC449TS250U2B	250				
185	130				241						
190	134				248						
195	137				256			NM6-108E	335		
200	141				263						
205	144				270					NM6-108E	335
210	148				277						
215	151				284						
220	155				292	F-TDC447TS300U2B /F-TXC449TS300U2B	300				
222	156	Max.335mm			295						
244	172	Min.395mm	CNPA200-150-420G	2950	291	F-TDC447TS300U2B /F-TXC449TS300U2B	300	NM6-108E	335	NM6-108E	335
250	176	UL:245-305psi FM:244-304psi			299						
255	179				305						
260	183				312						
265	186				318						
270	190				325						
275	193				332						
280	197				339						
285	200				346	F-TDC447TS350U2B /F-TXC586/7TS350U2B	350				
290	204				353						
295	208				360						
300	211				367						
305	215	Max.426mm			374						
100	70	Min.202mm	CNPA200-150-250G	3550	154	F-TDC405TS150U2B /F-TXC445TS150U2B	150				
105	74	UL: - psi FM: - psi			155						
110	77				162						
115	81				169						
120	84				176	F-TDC444TS200U2B /F-TXC447TS200U2B	200				
121	88	Max.225mm			178						

The contents of this publication must not be regarded as binding. EBARA ENGINEERING SINGAPORE PTE. LTD. reserves the right to effect any modification it deems necessary, without prior notice.

EBARA CNPAx DOUBLE SUCTION HORIZONTAL SPLIT CASE CENTRIFUGAL
UL LISTED/FM APPROVED FIRE PUMPS DRIVRE SELECTION TABLE

UL LISTED

FM APPROVED

PREV

RATED FLOW: 1500us.gpm(341m3/h)

NEXT

HEAD (UL&FM)		IMPELLER	PUMP (UL&FM)	SPEED	MAX SHAFT POWER	MOTOR DRIVER (UL)		DIESEL ENGINE DRIVER (UL/FM/T3)			
psi	meter	Dia.mm	MODEL CNPAx	rpm	hp	MODEL NEMA SF:1.15 ODP/TEFC	hp	MODEL (UL&FM)	hp	MODEL (UL/T3)	hp
122	86	Min.233mm	CNPA200-150-250	3550	145	F-TDC405TS150U2B /F-TXC445TS150U2B	150				
125	88	UL:122-216psi FM:122-215psi			149						
130	91				156						
135	95				163						
140	98				170						
145	102				177	F-TDC444TS200U2B /F-TXC447TS200U2B	200				
150	106				185						
155	109				192						
160	113				200						
165	116				208						
170	120				216						
175	123				224						
180	127				232	F-TDC449TS250U2B /F-TXC449TS250U2B	250				
185	130				241						
190	134				249						
195	137				258						
200	141				267						
205	144				275						
210	148	Max.300mm			284						
211	148	Min.240mm	CNPA200-150-310	3550	279	F-TDC449TS250U2B /F-TXC449TS250U2B	250				
215	151	UL:158~269psi FM:159~237psi			284						
220	155				292	F-TDC449TS300U2B /F-TXC449TS300U2B	300				
225	158				297						
230	162				303						
235	165				308						
237	167				311						
238	167				312						
240	169				314						
245	172				320						
250	176				326						
255	179				331						
260	183				336						
265	186				341						
269	189	Max.310mm			345						
69	49	Min.335/325mm	CNPA200-150-350	1760	94	F-TDC405T100U4B /F-TXC405T100U4B	100	NM6-105B	204	NM6-101-EC	180
70	49	UL:69-97psi FM:69-96psi			95						
75	53				102						
80	56				109						
85	60				117	F-TDC405T125U4B /F-TXC444T125U4B	125				
87	61	Min.378mm			120						
88	62	Min.372mm	CNPA200-150-375	1760	105	F-TDC405T100U4B /F-TXC405T100U4B	100	NM6-105B	204	NM6-101-EC	180
90	63	UL:88-128psi FM:88-128psi			108						
95	67				116	F-TDC405T125U4B /F-TXC444T125U4B	125				
100	70				124						
105	74				134						
110	77				143						
115	81				154	F-TDC444T150U4B /F-TXC445T150U4B	150				
121	85	Max.416mm			172						

The contents of this publication must not be regarded as binding. EBARA ENGINEERING SINGAPORE PTE. LTD. reserves the right to effect any modification it deems necessary, without prior notice.

EBARA CNPAx DOUBLE SUCTION HORIZONTAL SPLIT CASE CENTRIFUGAL UL LISTED/FM APPROVED FIRE PUMPS DRIVRE SELECTION TABLE

UL LISTED

FM APPROVED

PREV

RATED FLOW: 1500us.gpm(341m3/h)

HEAD (UL&FM)		IMPELLER	PUMP (UL&FM)	SPEED	MAX SHAFT POWER	MOTOR DRIVER (UL)		DIESEL ENGINE DRIVER (UL/FM/T3)			
psi	meter	Dia.mm	MODEL CNPAx	rpm	hp	MODEL NEMA SF:1.15 ODP/TEFC	hp	MODEL (UL&FM)	hp	MODEL (UL/T3)	hp
122	86	Min.415mm	CNPA200-150-480	1760	181	F-TDC445T200U4B /F-TXC447T200U4B	200	NM6-105B	204	NM6-108F-EC	241
125	88	UL:120-171psi FM:122-171psi			188						
130	91				201						
135	95				213			NM6-114C	221		
140	98				227			NM6-114B	280		
145	102				240	F-TDC447T250U4B /F-TXC449T250U4B	250				
150	106				254					NM6-108G-EC	296
155	109				268						
160	113				283			NM6-114D	298		
165	116				297	F-TDC449T300U4B /F-TXC449T300U4B	300			NM6-132-EC	435
170	120				312			NM6-135B	338		
171	120	Max.482mm			315						
100	70	Min.372mm	CNPA200-150-375	2100	125			NM6-105B	208	NM6-101-EC	196
105	74	UL:100-187psi FM:100-186psi			133						
110	77				140						
115	81				148						
120	84				157						
125	88				165						
130	91				174						
135	95				183						
140	98				192						
145	102				201					NM6-108F-EC	260
150	106				211			NM6-114C	248		
155	109				221						
160	113				231						
165	116				240						
170	120				251			NM6-114B NM6-114D	305 329		
175	123				261					NM6-108G-EC	326
180	127				272						
186	131				285						
187	132	Max.416mm			288						

The contents of this publication must not be regarded as binding. EBARA E NGINEERING SINGAPORE PTE. LTD. reserves the right to effect any modification it deems necessary, without prior notice.

EBARA CNPAx DOUBLE SUCTION HORIZONTAL SPLIT CASE CENTRIFUGAL UL LISTED/FM APPROVED FIRE PUMPS DRIVRE SELECTION TABLE

UL LISTED

FM APPROVED

RATED FLOW: 2000us.gpm(454m3/h)

NEXT

HEAD (UL&FM)		IMPELLER	PUMP (UL&FM)	SPEED	MAX SHAFT POWER	MOTOR DRIVER (UL)		DIESEL ENGINE DRIVER (UL/FM/T3)			
psi	meter	Dia.mm	MODEL CNPAx	rpm	hp	MODEL NEMA SF:1.15 ODP/TEFC	hp	MODEL (UL&FM)	hp	MODEL (UL/T3)	hp
82	58	Min.430mm	CNPA200-150-480	1480	132	F-TDC405T125U4B /F-TXC444T125U4B	125	NM6-105B	188	NM6-105B	188
85	60	UL:55~87psi FM:54~86psi			138						
90	63				148	F-TDC444T150U4B /F-TXC445T150U4B	150				
95	67				159						
100	70				170						
105	74				181	F-TDC445T200U4B /F-TXC447T200U4B	200				
110	77				193			NM6-114B NM6-114D	244 250	NM6-114B NM6-114D	244 250
115	81				205						
119	84	Max.490mm			216						
120	84	Min.500/488mm	CNPA200-150-600	1480	208	F-TDC445T200U4B /F-TXC447T200U4B	200	NM6-114B NM6-114D	244 250	NM6-114B NM6-114D	244 250
125	88	UL:101-185psi FM:102-186psi			218						
130	91				228						
135	95				239	F-TDC447T250U4B /F-TXC449T250U4B	250				
140	98				249			NM6-135B NM6-135	340 340	NM6-135B NM6-135	340 340
145	102				260						
150	106				271						
155	109				281						
160	113				294	F-TDC449T300U4B /F-TXC449T300U4B	300				
165	116				307						
170	120				321						
175	123				336	F-TDC449T350U4B /F-TXC587T350U4B	350				
180	127				352			NM6-127	436	NM6-127	436
186	131	Max.628mm			373						
187	132	Min.500mm	CNPA200-150-640	1480	396	F-TDC449T350U4B /F-TXC587T350U4B	350	NM6-127	436	NM6-127	436
190	134	UL:117~216psi FM:119~218psi			408	F-TDC449T400U4B /F-TXC587T400U4B	400				
195	137				427						
200	141				447			NM6-159C	450	NM6-159C	450
205	144				463	F-TXC586/7T450U4B	450	NM6-159	577	NM6-159 NM6-150	577 719
210	148				478						
215	151				492						
218	153	Max.664mm			497						
107	75	Min.260mm	CNPA200-150-330	2950	173	F-TDC444TS200U2B /F-TXC447TS200U2B	200	NM6-110E	192	NM6-110E	192
110	77	UL:107-190psi FM:107-177psi			179						
115	81				188						
120	84				198			NM6-110D	239	NM6-110D	268
125	88				207						
130	91				217						
135	95				226						
140	98				236	F-TDC449TS250U2B /F-TXC449TS250U2B	250				
145	102				246			NM6-108E	335		
150	106				255						
155	109				266						
160	113				276					NM6-108E	335
165	116				286						
170	120				297	F-TDC447TS300U2B /F-TXC449TS300U2B	300				
175	123				307						
177	125				311						
180	127				319						
185	130				332						
190	134	Max.339mm			345						
64	45	Min.330mm	CNPA200-150-400G	1760	119	F-TDC405T125U4B /F-TXC444T125U4B	125	NM6-105B	204	NM6-101-EC	180
70	49	UL:64-104psi FM:64-104psi			131						
71	50	Max.412mm			133						
72	51	Min.358mm	CNPA200-150-395	1760	116	F-TDC405T125U4B /F-TXC444T125U4B	125	NM6-105B	204	NM6-101-EC	180
75	53	UL: - psi FM: - psi			122						
80	56				131						
85	60				141						
90	63				151	F-TDC444T150U4B /F-TXC445T150U4B	150				
95	67	Max.400mm			162						

The contents of this publication must not be regarded as binding. EBARA ENGINEERING SINGAPORE PTE. LTD. reserves the right to effect any modification it deems necessary, without prior notice.

EBARA CNPAx DOUBLE SUCTION HORIZONTAL SPLIT CASE CENTRIFUGAL
UL LISTED/FM APPROVED FIRE PUMPS DRIVRE SELECTION TABLE

UL LISTED

FM APPROVED

PREV

RATED FLOW: 2000us.gpm(454m3/h)

HEAD (UL&FM)		IMPELLER	PUMP (UL&FM)	SPEED	MAX SHAFT POWER	MOTOR DRIVER (UL)		DIESEL ENGINE DRIVER (UL/FM/T3)			
psi	meter	Dia.mm	MODEL CNPAx	rpm	hp	MODEL NEMA SF:1.15 ODP/TEFC	hp	MODEL (UL&FM)	hp	MODEL (UL/T3)	hp
95	67	Min.390mm	CNPA200-150-400	1760	153	F-TDC444T150U4B /F-TXC445T150U4B	150	NM6-105B	204	NM6-101-EC	180
100	70	UL:94-115psi FM:95-116psi			160						
105	74				169						
110	77				179	F-TDC445T200U4B /F-TXC447T200U4B	200				
116	82	Max.420mm			191					NM6-108F-EC	241
117	82	Min.415mm	CNPA200-150-480	1760	191	F-TDC445T200U4B /F-TXC447T200U4B	200	NM6-105B	204	NM6-108F-EC	241
120	84	UL:109-165psi FM:114-166psi			198						
125	88				210			NM6-114C	221		
130	91				222			NM6-114B	280		
135	95				234	F-TDC447T250U4B /F-TXC449T250U4B	250			NM6-108G-EC	296
140	98				246						
145	102				260						
150	106				272						
155	109				285			NM6-114D	298		
160	113				299	F-TDC449T300U4B /F-TXC449T300U4B	300	NM6-135B	338	NM6-132-EC	435
165	116				313						
166	117	Max.482mm			315						
167	117	Min.430mm	CNPA200-150-480GL	1760	343	F-TDC449T300U4B /F-TXC449T300U4B	300	NM6-135	375	NM6-132-EC	435
170	120	UL:122-188psi FM:122-188psi			351	F-TDC449T350U4B /F-TXC587T350U4B	350				
175	123				365						
180	127				377			NM6-128B	396		
185	130				389						
188	132	Max.505mm			395						
111	78	Min.345mm	CNPA200-150-400	2100	182			NM6-105B	208	NM6-101-EC	196
115	81	UL:111-174psi FM:111-175psi			188						
120	84				196						
125	88				204					NM6-108F-EC	260
130	91				212			NM6-114C	248		
135	95				221						
140	98				231						
145	102				241						
150	106				252			NM6-114B	305		
155	109				264						
160	113				278					NM6-108G-EC	326
165	116				292						
170	120				308			NM6-114D	329		
175	123	Max.420mm			326						
146	103	Min.415mm	CNPA200-150-480	2000	263			NM6-114B	298	NM6-114B	298
150	106	UL: - psi FM: - psi			274						
155	109				288						
160	113				303			NM6-114D	320	NM6-114D	320
165	116				318						
170	120				333			NM6-128B	407	NM6-128B	407
175	123				348						
180	127				364						
185	130				380						
190	134				397						
195	137				413			NM6-127B	529	NM6-127B	529
200	141				430						
205	144				447						
210	148				465						
215	151				483						
220	155				500						
224	158	Max.490mm			515						
225	158	Min.410mm	CNPA250-200-500S	2000	478			NM6-127B	529	NM6-127B	529
230	162	UL:149-234psi FM:152-240psi			489						
235	165				500						
240	169	Max.515mm			510						

The contents of this publication must not be regarded as binding. EBARA E NGINEERING SINGAPORE PTE. LTD. reserves the right to effect any modification it deems necessary, without prior notice.

EBARA CNPAx DOUBLE SUCTION HORIZONTAL SPLIT CASE CENTRIFUGAL
UL LISTED/FM APPROVED FIRE PUMPS DRIVRE SELECTION TABLE

UL LISTED

FM APPROVED

RATED FLOW: 2500us.gpm(568m3/h)

NEXT

HEAD (UL&FM)		IMPELLER	PUMP (UL&FM)	SPEED	MAX SHAFT POWER	MOTOR DRIVER (UL)		DIESEL ENGINE DRIVER (UL/FM/T3)			
psi	meter	Dia.mm	MODEL CNPAx	rpm	hp	MODEL NEMA SF:1.15 ODP/TEFC	hp	MODEL (UL&FM)	hp	MODEL (UL/T3)	hp
84	59	Min.420mm	CNPA250-200-500	1480	175	F-TDC445T200U4B /F-TXC447T200U4B	200	NM6-114B NM6-114D	244 250	NM6-114B NM6-114D	244 250
85	60	UL:55~87psi FM:54~86psi			177						
90	63				187						
95	67				197						
100	70				207						
105	74				218						
110	77				229						
115	81				240	F-TDC447T250U4B /F-TXC449T250U4B	250				
120	84				252			NM6-135B	340	NM6-135B	340
125	88	Max.505mm			265						
126	89	Min.570mm	CNPA200-150-600	1480	244	F-TDC447T250U4B /F-TXC449T250U4B	250	NM6-114B NM6-114D	244 250	NM6-114B NM6-114D	244 250
130	91	UL:126-175psi FM:128-176psi			252			NM6-135B	340	NM6-135B	340
135	95				264						
140	98				275						
145	102				286						
150	106				298	F-TDC449T300U4B /F-TXC449T300U4B	300				
155	109				311						
160	113				325						
165	116				339						
170	120				353	F-TDC449T350U4B /F-TXC586/7T350U4B	350	NM6-127	436	NM6-127	436
176	124	Max.628mm			373						
177	125	Min.500mm	CNPA200-150-640	1480	393	F-TDC449T350U4B /F-TXC586/7T350U4B	350	NM6-127	436	NM6-127	436
180	127	UL:107~206psi FM:111~211psi			402						
185	130				423	F-TDC449T400U4B /F-TXC586/7T400U4B	400				
190	134				441			NM6-159C	450	NM6-159C	450
195	137				456			NM6-159	577	NM6-159 NM6-150	577 719
200	141				474	F-TXC586/7T450U4B	450				
205	144				487						
206	145				489						
207	146				491						
211	148	Max.664mm			497						
212	149	360mm	CNPA250-200-350	2980	511	F-TXC586/7T450U4B	450				
215	151	UL:114-227psi FM:115-227psi			518						
220	155				533						
225	158				548						
227	160	370mm			554						
62	44	Min.330mm	CNPA200-150-370	1760	134	F-TDC405T125U4B /F-TXC444T125U4B	125	NM6-105B	204	NM6-101-EC	180
65	46	UL: - psi FM: - psi			138						
70	49				150	F-TDC444T150U4B /F-TXC445T150U4B	150				
75	53				162						
80	56				174	F-TDC445T200U4B /F-TXC447T200U4B	200				
85	60				189					NM6-108F-EC	241
90	63				204						
95	67				225			NM6-114B NM6-114D	280 298		
98	69	Max.375mm			239	F-TDC447T250U4B /F-TXC449T250U4B	250				
85	60	Min.330mm	CNPA200-150-370	2000	189			NM6-105B	206	NM6-108F-EC	255
90	63	UL: - psi FM: - psi			203						
95	67				219			NM6-114C	240		
100	70				236						
105	74				256			NM6-114B NM6-114D	298 320	NM6-108G-EC	323
110	77				275						
115	81				295						
120	84				316			NM6-114D	320		
125	88				336			NM6-128B	407	NM6-132-EC	472
127	89	Max.375mm			345						

The contents of this publication must not be regarded as binding. EBARA ENGINEERING SINGAPORE PTE. LTD. reserves the right to effect any modification it deems necessary, without prior notice.

EBARA CNPAx DOUBLE SUCTION HORIZONTAL SPLIT CASE CENTRIFUGAL
UL LISTED/FM APPROVED FIRE PUMPS DRIVRE SELECTION TABLE

UL LISTED

FM APPROVED

PREV

RATED FLOW: 2500us.gpm(568m3/h)

HEAD (UL&FM)		IMPELLER	PUMP (UL&FM)	SPEED	MAX SHAFT POWER	MOTOR DRIVER (UL)		DIESEL ENGINE DRIVER (UL/FM/T3)			
psi	meter	Dia.mm	MODEL CNPAx	rpm	hp	MODEL NEMA SF:1.15 ODP/TEFC	hp	MODEL (UL&FM)	hp	MODEL (UL/T3)	hp
111	78	Min.430mm	CNPA200-150-480GL	1760	218	F-TDC445T200U4B /F-TXC447T200U4B	200	NM6-114C	221	NM6-108F-EC	241
115	81	UL:111~181psi FM:111~180psi			228			NM6-114B	280		
120	84				241	F-TDC447T250U4B /F-TXC449T250U4B	250				
125	88				254					NM6-108G-EC	296
130	91				267						
135	95				280						
140	98				293	F-TDC449T300U4B /F-TXC449T300U4B	300	NM6-114D	298	NM6-132-EC	435
145	102				305			NM6-135B	338		
150	106				318						
155	109				331						
160	113				344			NM6-135	375		
165	116				356	F-TDC449T350U4B /F-TXC587T350U4B	350				
170	120				369						
173	122	Max.505mm			376			NM6-128B	396		
174	122	Min.560mm	CNPA200-150-600S	1760	354	F-TDC449T350U4B /F-TXC587T350U4B	350	NM6-135	375	NM6-132-EC	435
175	123	UL: - psi FM: - psi			356						
180	127				369						
185	130				383			NM6-128B	396		
190	134				396						
195	137				410	F-TDC449T400U4B /F-TXC587T400U4B	400	NM6-127	469		
200	141				425						
205	144				440					NM8-132-EC NM6-127B	625 512
210	148				455						
215	151				471	F-TDC449T450U4B /F-TXC586/7T450U4B	450	NM6-159C	546		
220	155				487						
225	158				503						
229	161	Max.605mm			516					NM8-132-EC NM6-127B	625
135	95	Min.415mm	CNPA200-150-480	2000	263			NM6-114B	298	NM6-114B	298
140	98	UL: - psi FM: - psi			275						
145	102				288						
150	106				302			NM6-114D	320	NM6-114D	320
155	109				316						
160	113				330			NM6-128B	407	NM6-128B	407
165	116				344						
170	120				359						
175	123				373						
180	127				389						
185	130				404						
190	134				420			NM6-127B	529	NM6-127B	529
195	137				435						
200	141				452						
205	144				468						
210	148				485						
215	151				502						
219	154	Max.490mm			515						
220	155	Min.410mm	CNPA250-200-500S	2000	485			NM6-127B	529	NM8-132-EC	667
225	158	UL:141~225psi FM:144~232psi			496						
230	162				506						
232	163	Max.515mm			510						

The contents of this publication must not be regarded as binding. EBARA E NGINEERING SINGAPORE PTE. LTD. reserves the right to effect any modification it deems necessary, without prior notice.

EBARA CNPAx DOUBLE SUCTION HORIZONTAL SPLIT CASE CENTRIFUGAL UL LISTED/FM APPROVED FIRE PUMPS DRIVRE SELECTION TABLE

UL LISTED

FM APPROVED

RATED FLOW: 3000us.gpm(681m3/h)

NEXT

HEAD (UL&FM)		IMPELLER	PUMP (UL&FM)	SPEED	MAX SHAFT POWER	MOTOR DRIVER (UL)		DIESEL ENGINE DRIVER (UL/FM/T3)			
psi	meter	Dia.mm	MODEL CNPAx	rpm	hp	MODEL NEMA SF:1.15 ODP/TEFC	hp	MODEL (UL&FM)	hp	MODEL (UL/T3)	hp
95	67	Min.460mm	CNPA250-200-500	1480	215	F-TDC445T200U4B /F-TXC447T200U4B	200	NM6-114B NM6-114D	244 250	NM6-114B NM6-114D	244 250
100	70	UL:55~87psi FM:54~86psi			226						
105	74				238	F-TDC447T250U4B /F-TXC449T250U4B	250	NM6-135B NM6-135	340 340	NM6-135B NM6-135	340 340
110	77				250						
115	81				262						
119	84	Max.505mm			273						
120	84	Min.490mm	CNPA250-200-600S	1480	301	F-TDC449T300U4B /F-TXC449T300U4B	300	NM6-135B	340	NM6-135B	340
125	88	UL: - psi FM: - psi			315						
130	91				329						
135	95				344			NM6-127 NM6-159C	436 450	NM6-127 NM6-159C	436 450
140	98				358	F-TDC449T350U4B /F-TXC587T350U4B	350				
145	102				373						
150	106				388						
155	109				402						
160	113				417	F-TDC449TS400U4B /F-TXC587T400U4B	400				
161	113	Max.575mm			420						
162	114	Min.628mm	CNPA200-150-640	1480	385	F-TDC449T350U4B /F-TXC587T350U4B	350	NM6-127	436	NM6-127	436
165	116	UL:162~194psi FM:166~200psi			396						
166	117				400						
170	120				414	F-TDC449T400U4B /F-TXC587T400U4B	400				
175	123				431						
180	127				449			NM6-159C	450	NM6-159	577
185	130				466	F-TXC586/7T450U4B	450	NM6-159	577	NM6-159 NM6-150	577 719
190	134				479						
194	136				488						
195	137				490						
200	141	Max.664mm			497						
201	141	Min.585mm	CNPA300-250-640	1480	604			NM6-159B NM6-150B	680 780	NM6-159B NM6-150	680 719
205	144	UL:176~249psi FM:176~243psi			617						
210	148				634						
215	151				650						
220	155				667						
225	158				684			NM6-150B	780	NM6-150	719
230	162				701						
235	165				718						
240	169				735					NM6-150B	780
243	171				745						
245	172				752						
249	175	Max.688mm			765						
115	81	Min.425mm	CNPA250-200-450	1760	261	F-TDC447T250U4B /F-TXC449T250U4B	250	NM6-114B	280	NM6-108G-EC	296
120	84	UL:115~147psi FM:119~148psi			273						
125	88				286			NM6-114D	298		
130	91				300	F-TDC449T300U4B /F-TXC449T300U4B	300	NM6-135B	338	NM6-132-EC	435
135	95				313						
140	98				327						
145	102				341			NM6-135	375		
148	104	Max.469mm			347	F-TDC449T350U4B /F-TXC587T350U4B	350				
149	105	Min.445mm	CNPA250-200-500D	1760	352	F-TDC449T350U4B /F-TXC587T350U4B	350	NM6-135	375	NM6-132-EC	435
150	106	UL: - psi FM: - psi			355						
155	109				369						
160	113				384			NM6-128B	396		
165	116				400			NM6-127	469		
170	120				416	F-TDC449T400U4B /F-TXC587T400U4B	400				
175	123				432						
180	127				450					NM8-132-EC	625
183	129	Max.512mm			460						

The contents of this publication must not be regarded as binding. EBARA ENGINEERING SINGAPORE PTE. LTD. reserves the right to effect any modification it deems necessary, without prior notice.

EBARA CNPAx DOUBLE SUCTION HORIZONTAL SPLIT CASE CENTRIFUGAL
UL LISTED/FM APPROVED FIRE PUMPS DRIVRE SELECTION TABLE

UL LISTED

FM APPROVED

PREV

RATED FLOW: 3000us.gpm(681m3/h)

HEAD (UL&FM)		IMPELLER	PUMP (UL&FM)	SPEED	MAX SHAFT POWER	MOTOR DRIVER (UL)		DIESEL ENGINE DRIVER (UL/FM/T3)			
psi	meter	Dia.mm	MODEL CNPAx	rpm	hp	MODEL NEMA SF:1.15 ODP/TEFC	hp	MODEL (UL&FM)	hp	MODEL (UL/T3)	hp
184	129	Min.490mm	CNPA250-200-600S	1760	496	F-TDC449T450U4B /F-TXC586/7T450U4B	450	NM6-159C	546	NM8-132-EC NM6-127B	625 512
185	130	UL: - psi FM: - psi			501						
190	134				516					NM8-132-EC NM6-159C	625 546
195	137				532	F-TXC586/7T500U4B	500				
200	141				548			NM6-159	671	NM8-132-EC NM6-159	625 673
205	144				565						
210	148				582						
215	151				601						
220	155				620						
225	158				641					NM6-159	673
230	162				663						
235	165				688			NM6-159B	778	NM6-159B NM6-150	783 771
238	167	Max.575mm			703						
239	168	Min.485mm	CNPA250-200-600	1760	820			NM6-150B	858	NM6-150B	858
240	169	UL:166~246psi FM:169~246psi			824						
245	172				849						
246	173	Max.580mm			853						
158	111	Min.425mm	CNPA250-200-450	2000	386			NM6-128B	407	NM6-132-EC NM6-128B	472 407
160	113	UL:158~197psi FM:159~198psi			389						
165	116				404						
170	120				420			NM8-128	492	NM6-132-EC NM6-127B	472 529
175	123				435						
180	127				451						
185	130				467						
190	134				484					NM8-132-EC NM6-127B	667 529
195	137				501			NM10-128	611		
198	139	Max.469mm			511						
199	140	Min.445mm	CNPA250-200-500D	2000	492			NM8-128	492	NM8-132-EC NM6-127B	667 529
200	141	UL: - psi FM: - psi			495			NM10-128	611		
205	144				511						
210	148				527						
215	151				545					NM8-132-EC	667
220	155				563						
225	158				581						
230	162				601						
235	165				622			NM12-128	754		
240	169				644						
244	172	Max.512mm			662						

The contents of this publication must not be regarded as binding. EBARA ENGINEERING SINGAPORE PTE. LTD. reserves the right to effect any modification it deems necessary, without prior notice.

EBARA CNPAx DOUBLE SUCTION HORIZONTAL SPLIT CASE CENTRIFUGAL UL LISTED/FM APPROVED FIRE PUMPS DRIVRE SELECTION TABLE

UL LISTED

FM APPROVED

RATED FLOW: 3500us.gpm(795m3/h)

NEXT

HEAD (UL&FM)		IMPELLER	PUMP (UL&FM)	SPEED	MAX SHAFT POWER	MOTOR DRIVER (UL)		DIESEL ENGINE DRIVER (UL/FM/T3)			
psi	meter	Dia.mm	MODEL CNPAx	rpm	hp	MODEL NEMA SF:1.15 ODP/TEFC	hp	MODEL (UL&FM)	hp	MODEL (UL/T3)	hp
107	75	Min.485mm	CNPA250-200-600	1480	303	F-TDC449T300U4B /F-TXC449T300U4B	300	NM6-135B	340	NM6-135B	340
110	77	UL:55~87psi FM:54~86psi			309						
115	81				322						
120	84				335						
125	88				350	F-TDC449T350U4B /F-TXC587T350U4B	350	NM6-127 NM6-159C	436 450	NM6-127 NM6-159C	436 450
130	91				366						
135	95				383						
140	98				400						
145	102				418	F-TDC449T400U4B /F-TXC587T400U4B	400				
150	106				435						
155	109				452			NM6-159	577	NM6-159 NM6-150	577 771
160	113				469	F-TXC586/7T450U4B	450				
165	116				484						
170	120				499						
175	123				514						
180	127				528	TXC586/7T500U4B	500				
184	129	Max.605mm			540						
185	130	Min.585mm	CNPA300-250-640	1480	579			NM6-159B	680	NM6-159B NM6-150	680 719
190	134	UL:169~242psi FM:169~242psi			595						
195	137				611						
200	141				627						
205	144				643						
210	148				659						
215	151				676						
220	155				692			NM6-150B	780	NM6-150	719
225	158				709						
230	162				725					NM6-150B	780
235	165				742						
240	169				759						
242	170	Max.688mm			766						
135	95	Min.460mm	CNPA250-200-500	1760	345	F-TDC449T350U4B /F-TXC587T350U4B	350	NM6-135	375	NM6-132-EC	435
140	98	UL:136~170psi FM:135~170psi			359						
145	102				372						
150	106				385			NM6-128B	396		
155	109				398			NM6-127	469		
160	113				412	F-TDC449T400U4B /F-TXC587T400U4B	400				
165	116				425						
170	120	Max.505mm			439					NM8-132-EC	625
171	120	Min.490mm	CNPA250-200-600S	1760	488	F-TXC586/7T450U4B	450	NM6-127B NM6-159C	512 546	NM8-132-EC NM6-127B	625 512
175	123	UL: - psi FM: - psi			500						
180	127				516			NM6-159C	546	NM8-132-EC NM6-159	625 673
185	130				532	TXC586/7T500U4B	500				
190	134				548			NM6-159	671		
195	137				564						
200	141				581						
205	144				599						
210	148				617						
215	151				637					NM6-159	673
220	155				657						
225	158				680			NM6-159B	778	NM6-150	771
230	162	Max.575mm			703						

The contents of this publication must not be regarded as binding. EBARA ENGINEERING SINGAPORE PTE. LTD. reserves the right to effect any modification it deems necessary, without prior notice.

EBARA CNPAx DOUBLE SUCTION HORIZONTAL SPLIT CASE CENTRIFUGAL UL LISTED/FM APPROVED FIRE PUMPS DRIVRE SELECTION TABLE

UL LISTED

FM APPROVED

PREV

RATED FLOW: 3500us.gpm(795m3/h)

HEAD (UL&FM)		IMPELLER	PUMP (UL&FM)	SPEED	MAX SHAFT POWER	MOTOR DRIVER (UL)		DIESEL ENGINE DRIVER (UL/FM/T3)			
psi	meter	Dia.mm	MODEL CNPAx	rpm	hp	MODEL NEMA SF:1.15 ODP/TEFC	hp	MODEL (UL&FM)	hp	MODEL (UL/T3)	hp
231	162	Min.485mm	CNPA250-200-600	1760	801			NM6-150B	858	NM6-150B	858
235	165	UL:160~241psi			820						
240	169	FM:163~242psi			843						
242	170	Max.580mm			853						
153	108	Min.420mm	CNPA250-200-500	2000	448			NM8-128	492	NM6-132-EC	472
155	109	UL:154~229psi			453					NM6-127B	529
160	113	FM:153~230psi			468						
164	115	Max.505mm			478					NM6-132-EC	667
165	116	Min.445mm	CNPA250-200-500D	2000	432			NM8-128	492	NM6-132-EC	472
170	120	UL: - psi FM: - psi			445					NM6-127B	529
175	123				459						
180	127				473						
185	130				488					NM8-132-EC	667
190	134				503			NM10-128	611	NM6-127B	529
195	137				519						
200	141				536					NM8-132-EC	667
205	144				553						
210	148				570						
215	151				589						
220	155				607						
225	158				627			NM12-128	754		
230	162				648						
234	165	Max.512mm			662						

The contents of this publication must not be regarded as binding. EBARA ENGINEERING SINGAPORE PTE. LTD. reserves the right to effect any modification it deems necessary, without prior notice.

EBARA CNPAx DOUBLE SUCTION HORIZONTAL SPLIT CASE CENTRIFUGAL
UL LISTED/FM APPROVED FIRE PUMPS DRIVRE SELECTION TABLE

UL LISTED

FM APPROVED

RATED FLOW: 4000us.gpm(908m3/h)

HEAD (UL&FM)		IMPELLER	PUMP (UL&FM)	SPEED	MAX SHAFT POWER	MOTOR DRIVER (UL)		DIESEL ENGINE DRIVER (UL/FM/T3)			
psi	meter	Dia.mm	MODEL CNPAx	rpm	hp	MODEL NEMA SF:1.15 ODP/TEFC	hp	MODEL (UL&FM)	hp	MODEL (UL/T3)	hp
115	81	Min.505mm	CNPA300-250-500	1480	365	F-TDC449T350U4B /F-TXC587T350U4B	350	NM6-127	436	NM6-127	436
120	84	UL:55~87psi FM:54~86psi			385						
125	88				405	F-TDC449T400U4B /F-TXC587T400U4B	400				
130	91				425						
135	95				446			NM6-159C	450	NM6-159C	450
141	99	Max.569mm			471	F-TXC586/7T450U4B	450	NM6-159	577	NM6-159 / NM6-150	577 / 719
142	100	Min.550mm	CNPA250-200-600	1480	439	F-TDC449T400U4B /F-TXC587T400U4B	400	NM6-159C	450	NM6-159C	450
145	102	UL:142~176psi FM:142~176psi			450						
150	106				470	F-TXC586/7T450U4B	450	NM6-159	577	NM6-159 NM6-150	577 719
155	109				486						
160	113				502						
165	116				515						
170	120				527	F-TXC586/7T500U4B	500				
176	124	Max.605mm			540						
177	125	Min.585mm	CNPA300-250-640	1480	585			NM6-159B	680	NM6-159B	680
180	127	UL:162~242psi FM:156~233psi			595						
185	130				610						
190	134				626						
195	137				643						
200	141				658						
205	144				675						
210	148				691			NM6-150B	780	NM6-150	719
215	151				707						
220	155				723					NM6-150B	780
225	158				739						
230	162				756						
233	164	Max.688mm			766						
114	80	Min.430mm	CNPA300-250-500S	1760	357			NM6-135	375	NM6-132-EC	435
115	81	UL: - psi FM: - psi			361						
120	84				377			NM6-128B	396		
125	88				394						
130	91				411			NM6-127	469		
135	95				428						
140	98				446					NM8-132-EC	625
145	102				463						
150	106				481			NM6-159C	546	NM8-132-EC NM6-127B	625 512
155	109				500						
160	113				520					NM8-132-EC NM6-159C	625 546
165	116				541						
170	120				562			NM6-159	671	NM8-132-EC NM6-159	625 673
175	123				585						
179	126	Max.530mm			605						
180	127	Min.485mm	CNPA250-200-600	1760	612			NM6-159	671	NM6-132-EC / NM6-150	625 / 673
185	130	UL:152~234psi FM:156~236psi			634					NM6-159	673
190	134				656						
195	137				678			NM6-159B	778	NM6-150	771
200	141				699						
205	144				721						
210	148				742						
215	151				763			NM6-150B	858		
220	155				784					NM6-150B	858
225	158				805						
230	162				826						
234	165	Max.580mm			844						
235	165	Min.540mm	CNPA300-250-600L	1760	1035			NM12-159B	1080	NM12-159B	1080
240	169	UL:203~246psi FM:203~245psi			1067			NM12-150	1100	NM12-150	1100
245	172				1101			NM12-159	1187	NM12-159	1207
246	173	Max.594mm			1108						

The contents of this publication must not be regarded as binding. EBARA E NGINEERING SINGAPORE PTE. LTD. reserves the right to effect any modification it deems necessary, without prior notice.

EBARA CNPAx DOUBLE SUCTION HORIZONTAL SPLIT CASE CENTRIFUGAL UL LISTED/FM APPROVED FIRE PUMPS DRIVRE SELECTION TABLE

UL LISTED

FM APPROVED

RATED FLOW: 4500us.gpm(1022m3/h)

NEXT

HEAD (UL&FM)		IMPELLER	PUMP (UL&FM)	SPEED	MAX SHAFT POWER	MOTOR DRIVER (UL)		DIESEL ENGINE DRIVER (UL/FM/T3)			
psi	meter	Dia.mm	MODEL CNPAx	rpm	hp	MODEL NEMA SF:1.15 ODP/TEFC	hp	MODEL (UL&FM)	hp	MODEL (UL/T3)	hp
111	78	Min.505mm	CNPA300-250-500	1480	366	F-TDC449T350U4B /F-TXC587T350U4B	350	NM6-127	436	NM6-127	436
115	81	UL:55~87psi FM:54~86psi			381						
120	84				401						
125	88				421	F-TDC449T400U4B /F-TXC587T400U4B	400				
130	91				441			NM6-159C	450	NM6-159C	450
135	95				462	F-TXC586/7T450U4B	450	NM6-159	577	NM6-159	577
140	98				482						
144	101	Max.569mm			499						
145	102	Min.565mm	CNPA300-250-600	1450	535	F-TXC586/7T500U4B	500	NM6-159B	680	NM6-159B	680
150	106	UL:143~207psi FM:143~207psi			561						
155	109				588						
160	113				616						
165	116				646						
170	120				676						
175	123				709			NM6-150B	780	NM6-150	719
180	127				743					NM6-150B	780
185	130				779						
190	134				815			NM12-159B NM12-150	909 980	NM12-159B NM12-150	909 980
195	137				853						
200	141				893						
205	144				935			NM12-150	980	NM12-150	980
207	146	Max.660mm			952						
200	141	Min.605mm	CNPA300-250-640G	1480	793			NM12-159B NM12-150	909 980	NM12-159B NM12-150	909 980
205	144	UL:184~284psi FM:184~283psi			820						
210	148				848						
215	151				876						
220	155				905						
225	158				935			NM12-150	980	NM12-150	980
230	162				965						
235	165				995						
240	169				1027						
245	172				1057						
250	176				1091						
255	179				1126						
260	183				1162						
265	186				1198						
270	190				1232						
275	193				1267						
280	197				1298						
283	199	Max.710mm			1318						
118	83	Min.420mm	CNPA300-250-500	1800	418	F-TDC449T400U4B /F-TXC587T400U4B	400	NM6-127	469	NM6-132-EC	435
120	84	UL:121~222psi FM:118~220psi			426						
125	88				449					NM8-132-EC NM6-127B	625 512
130	91				472	F-TDC449T450U4B /F-TXC586/7T450U4B	450	NM6-127B	512		
135	95				496						
140	98				519	TXC586/7T500U4B	500	NM6-159C	546	NM8-132-EC NM6-159C	625 546
145	102				543						
150	106				566			NM6-159	671	NM8-132-EC NM6-159	625 673
155	109				589						
160	113				612						
165	116				635					NM6-159	673
170	120				658						
174	122	Max.569mm			677			NM6-159B	778	NM6-150	771

The contents of this publication must not be regarded as binding. EBARA ENGINEERING SINGAPORE PTE. LTD. reserves the right to effect any modification it deems necessary, without prior notice.

EBARA CNPAx DOUBLE SUCTION HORIZONTAL SPLIT CASE CENTRIFUGAL UL LISTED/FM APPROVED FIRE PUMPS DRIVRE SELECTION TABLE

UL LISTED

FM APPROVED

PREV

RATED FLOW: 4500us.gpm(1022m3/h)

HEAD (UL&FM)		IMPELLER	PUMP (UL&FM)	SPEED	MAX SHAFT POWER	MOTOR DRIVER (UL)		DIESEL ENGINE DRIVER (UL/FM/T3)			
psi	meter	Dia.mm	MODEL CNPAx	rpm	hp	MODEL NEMA SF:1.15 ODP/TEFC	hp	MODEL (UL&FM)	hp	MODEL (UL/T3)	hp
175	123	Min.520mm	CNPA250-200-600	1760	624			NM6-159	671	NM8-132-EC	625
180	127	UL:175~226psi FM:177~228psi			645					NM6-159	673
185	130				667						
190	134				690			NM6-159B	778	NM6-150	771
195	137				713						
200	141				735						
205	144				757						
210	148				779			NM6-150B	858	NM6-150B	858
215	151				800						
220	155				820						
225	158				841						
228	160	Max.580mm			854						
229	161	Min.540mm	CNPA300-250-600L	1760	1010			NM12-159B NM12-150	1080 1100	NM12-159B NM12-150	1080 1100
230	162	UL: - psi FM: - psi			1016						
238	167				1068						
244	172	Max.594mm			1108			NM12-159	1187	NM12-159	1207

The contents of this publication must not be regarded as binding. EBARA ENGINEERING SINGAPORE PTE. LTD. reserves the right to effect any modification it deems necessary, without prior notice.

EBARA CNPAx DOUBLE SUCTION HORIZONTAL SPLIT CASE CENTRIFUGAL
UL LISTED/FM APPROVED FIRE PUMPS DRIVRE SELECTION TABLE

UL LISTED

FM APPROVED

RATED FLOW: 5000us.gpm(1136m3/h)

HEAD (UL&FM)		IMPELLER	PUMP (UL&FM)	SPEED	MAX SHAFT POWER	MOTOR DRIVER (UL)		DIESEL ENGINE DRIVER (UL/FM/T3)			
psi	meter	Dia.mm	MODEL CNPAx	rpm	hp	MODEL NEMA SF:1.15 ODP/TEFC	hp	MODEL (UL&FM)	hp	MODEL (UL/T3)	hp
131	92	Min.520mm	CNPA350-250-640	1480	599			NM6-159B	680	NM6-159B	680
135	95	UL:55~87psi FM:54~86psi			622						
138	97	Max.660mm			640						
139	98	Min.565mm	CNPA300-250-600	1450	525	TXC586/7T500U4B	500	NM6-159B	680	NM6-159B	680
145	102	UL:139~206psi FM:139~206psi			555						
150	106				581						
155	109				608						
160	113				637						
165	116				666						
170	120				696			NM6-150B	780	NM6-150	719
175	123				729					NM6-150B	780
180	127				762						
185	130				796			NM12-159B NM12-150	909 980	NM12-159B NM12-150	909 980
190	134				832						
195	137				868						
200	141				907						
206	145	Max.660mm			956			NM12-150	980	NM12-150	980
211	148	Min.645mm	CNPA300-250-640G	1480	896			NM12-159B NM12-150	909 980	NM12-159B NM12-150	909 980
215	151	UL:211~277psi FM:211~277psi			919			NM12-150	980	NM12-150	980
220	155				948						
225	158				978						
230	162				1008						
235	165				1039						
240	169				1072						
245	172				1105						
250	176				1141						
255	179				1177						
260	183				1211						
265	186				1247						
270	190				1279						
277	195	Max.710mm			1326						
132	93	Min.450mm	CNPA300-250-500	1800	504	TXC586/7T500U4B	500	NM6-159C	546	NM8-132-EC	625
135	95	UL:134~218psi FM:132~217psi			518					NM8-132-EC	625
140	98				542					NM6-159C	546
145	102				565			NM6-159	671	NM8-132-EC NM6-159	625 673
150	106				589						
155	109				612						
160	113				636					NM6-159	673
165	116				659						
170	120				682			NM6-159B	778	NM6-150 NM6-159B	771 783
175	123				706						
180	127				729						
185	130				752						
190	134				774					NM6-150B	858
195	137				797			NM6-150B	858		
200	141				821						
205	144				844						
210	148	Max.569mm			868			NM12-159B NM12-150	1080 1100	NM12-159B NM12-150	1080 1100
211	148	Min.540mm	CNPA300-250-600L	1760	919						
215	151	UL:197~240psi FM:197~241psi			946			NM12-159B NM12-150	1080 1100	NM12-159B NM12-150	1080 1100
220	155				973						
228	160				1023						
235	165				1068						
241	170	Max.594mm			1108			NM12-159	1187	NM12-159	1207

The contents of this publication must not be regarded as binding. EBARA ENGINEERING SINGAPORE PTE. LTD. reserves the right to effect any modification it deems necessary, without prior notice.

EBARA CNPAx DOUBLE SUCTION HORIZONTAL SPLIT CASE CENTRIFUGAL
UL LISTED/FM APPROVED FIRE PUMPS DRIVRE SELECTION TABLE

UL LISTED

FM APPROVED

RATED FLOW: 5500us.gpm(1249m3/h)

HEAD (UL&FM)		IMPELLER	PUMP (UL&FM)	SPEED	MAX SHAFT POWER	MOTOR DRIVER (UL)		DIESEL ENGINE DRIVER (UL/FM/T3)			
psi	meter	Dia.mm	MODEL CNPAx	rpm	hp	MODEL NEMA SF:1.15 ODP/TEFC	hp	MODEL (UL&FM)	hp	MODEL (UL/T3)	hp
124	87	Min.540mm	CNPA400-350-640	1480	627			NM6-159B	680	NM6-159B	680
130	91	UL:55~87psi FM:54~86psi			662						
135	95				693			NM6-150B	780	NM6-150	719
140	98				725					NM6-150B	780
145	102				756						
150	106				789			NM12-159B NM12-150	909 980	NM12-159B NM12-150	909 980
155	109				821						
160	113				854						
165	116				888						
170	120				922			NM12-150	980	NM12-150	980
175	123				956						
180	127				990			NM12-159	1036	NM12-159	1036
185	130				1025						
190	134				1061						
192	135	Max.655mm			1075						
205	144	Min.650mm	CNPA400-300-750	1480	1245						
210	148	UL:205~278psi			1275						
215	151				1310						
220	155				1346						
225	158				1384						
230	162				1424						
235	165				1467						
240	169				1512						
245	172				1559						
250	176				1608						
255	179				1659						
260	183				1713						
265	186				1770						
270	190				1830						
275	193				1893						
278	196	Max.758mm			1933						
191	134	Min.540mm	CNPA300-250-600L	1760	835			NM6-150B	858	NM6-150B	858
195	137	UL:192~237psi FM:192~237psi			850						
200	141				878			NM12-159B NM12-150	1080 1100	NM12-159B NM12-150	1080 1100
205	144				907						
210	148				937						
215	151				967						
220	155				997						
225	158				1028						
230	162				1060						
235	165				1092			NM12-150	1100	NM12-150	1100
237	167	Max.594mm			1105			NM12-159	1187	NM12-159	1207
238	167	Min.560mm	CNPA350-250-640	1760	1237						
240	169	FM:223~243psi			1252						
243	171	Max.585mm			1276						

The contents of this publication must not be regarded as binding. EBARA E NGINEERING SINGAPORE PTE. LTD. reserves the right to effect any modification it deems necessary, without prior notice.

EBARA CNPAx DOUBLE SUCTION HORIZONTAL SPLIT CASE CENTRIFUGAL
UL LISTED/FM APPROVED FIRE PUMPS DRIVRE SELECTION TABLE

UL LISTED

FM APPROVED

RATED FLOW: 6000us.gpm(1363m3/h)

HEAD (UL&FM)		IMPELLER	PUMP (UL&FM)	SPEED	MAX SHAFT POWER	MOTOR DRIVER (UL)		DIESEL ENGINE DRIVER (UL/FM/T3)			
psi	meter	Dia.mm	MODEL CNPAx	rpm	hp	MODEL NEMA SF:1.15 ODP/TEFC	hp	MODEL (UL&FM)	hp	MODEL (UL/T3)	hp
124	87	Min.520mm	CNPA350-250-640	1480	599			NM6-159B	680	NM6-159B	680
130	91	UL:55~87psi FM:54~86psi			635						
135	95				665						
140	98				695			NM6-150B	780	NM6-150	719
145	102				725					NM6-150B	780
150	106				755						
155	109				785			NM12-159B NM12-150	909 980	NM12-159B NM12-150	909 980
160	113				815						
165	116				844						
170	120				872						
175	123				901						
180	127				929			NM12-150	980	NM12-150	980
185	130				957						
190	134				985			NM12-159	1036	NM12-159	1036
195	137				1012						
200	141				1036						
205	144				1065						
209	147	Max.660mm			1087						
210	148	Min.650mm	CNPA400-300-750	1480	1285						
215	151	UL:204~277psi			1320						
220	155				1357						
225	158				1397						
230	162				1438						
235	165				1481						
240	169				1526						
245	172				1573						
250	176				1622						
255	179				1673						
260	183				1729						
265	186				1784						
270	190				1845						
275	193				1907						
277	195	Max.758mm			1933						
185	130	Min.540mm	CNPA300-250-600L	1760	835			NM6-150B	858	NM6-150B	858
190	134	UL:186~232psi FM:187~233psi			855						
195	137				883			NM12-159B NM12-150	1080 1100	NM12-159B NM12-150	1080 1100
200	141				911						
205	144				939						
210	148				968						
215	151				997						
220	155				1027						
225	158				1058						
233	164	Max.594mm			1108			NM12-159	1187	NM12-159	1207
234	165	Min.560mm	CNPA350-250-640	1760	1239						
240	169	UL:220~280psi FM:219~239psi			1283						
245	172				1319						
250	176				1354						
255	179				1389						
260	183				1425						
265	186				1463						
270	190				1503						
275	193				1545						
280	197	Max.630mm			1588						

The contents of this publication must not be regarded as binding. EBARA ENGINEERING SINGAPORE PTE. LTD. reserves the right to effect any modification it deems necessary, without prior notice.

EBARA CNPAx DOUBLE SUCTION HORIZONTAL SPLIT CASE CENTRIFUGAL
UL LISTED/FM APPROVED FIRE PUMPS DRIVRE SELECTION TABLE

UL LISTED

FM APPROVED

RATED FLOW: 6500us.gpm(1476m3/h)

HEAD (UL&FM)		IMPELLER	PUMP (UL&FM)	SPEED	MAX SHAFT POWER	MOTOR DRIVER (UL)		DIESEL ENGINE DRIVER (UL/FM/T3)			
psi	meter	Dia.mm	MODEL CNPAx	rpm	hp	MODEL NEMA SF:1.15 ODP/TEFC	hp	MODEL (UL&FM)	hp	MODEL (UL/T3)	hp
116	82	Min.540mm	CNPA400-350-640	1480	627			NM6-159B	680	NM6-159B	680
120	84	UL:55~87psi FM:54~86psi			647						
125	88				677						
130	91				708			NM6-150B	780	NM6-150	719
135	95				739					NM6-150B	780
140	98				770						
145	102				802			NM12-159B NM12-150	909 980	NM12-159B NM12-150	909 980
150	106				834						
155	109				867						
160	113				900						
165	116				933			NM12-150	980	NM12-150	980
170	120				967						
175	123				1002			NM12-159	1036	NM12-159	1036
180	127				1036						
186	131	Max.655mm			1079						
203	143	660mm UL:205psi FM:203psi	CNPA350-250-640	1480	1074						
205	144	Min.650mm	CNPA400-300-750	1480	1265						
210	148	UL:203~276psi			1299						
215	151				1335						
220	155				1373						
225	158				1413						
230	162				1454						
235	165				1498						
240	169				1544						
245	172				1592						
250	176				1641						
255	179				1692						
260	183				1745						
265	186				1801						
270	190				1859						
275	193				1921						
276	194	Max.758mm			1933						
216	152	Min.560mm	CNPA350-250-640	1760	1131			NM12-159	1187	NM12-159	1207
220	155	UL:216~276psi FM:215~235psi			1163						
225	158				1202						
230	162				1240						
235	165				1276						
240	169				1312						
245	172				1347						
250	176				1381						
255	179				1414						
260	183				1452						
265	186				1492						
270	190				1534						
275	193				1578						
276	194	Max.630mm			1588						

The contents of this publication must not be regarded as binding. EBARA ENGINEERING SINGAPORE PTE. LTD. reserves the right to effect any modification it deems necessary, without prior notice.

EBARA CNPAx DOUBLE SUCTION HORIZONTAL SPLIT CASE CENTRIFUGAL
UL LISTED/FM APPROVED FIRE PUMPS DRIVRE SELECTION TABLE

UL LISTED

FM APPROVED

RATED FLOW: 7000us.gpm(1590m3/h)

HEAD (UL&FM)		IMPELLER	PUMP (UL&FM)	SPEED	MAX SHAFT POWER	MOTOR DRIVER (UL)		DIESEL ENGINE DRIVER (UL/FM/T3)			
psi	meter	Dia.mm	MODEL CNPAx	rpm	hp	MODEL NEMA SF:1.15 ODP/TEFC	hp	MODEL (UL&FM)	hp	MODEL (UL/T3)	hp
112	79	Min.540mm	CNPA400-350-640	1480	627			NM6-159B	680	NM6-159B	680
115	81	UL:55~87psi FM:54~86psi			642						
120	84				672						
125	88				702			NM6-150B	780	NM6-150	719
130	91				733					NM6-150B	780
135	95				764						
140	98				795			NM12-159B NM12-150	909 980	NM12-159B NM12-150	909 980
145	102				827						
150	106				859						
155	109				892						
160	113				925			NM12-150	980	NM12-150	980
165	116				959						
170	120				993			NM12-159	1036	NM12-159	1036
175	123				1027						
182	128	Max.655mm			1076						
200	141	660mm UL: 201psi FM:200psi	CNPA350-250-640	1480	1081						
200	141	UL:200~274psi	CNPA400-300-750	1480	1245						
205	144				1279						
210	148				1314						
215	151				1352						
220	155				1391						
225	158				1432						
230	162				1474						
235	165				1519						
240	169				1565						
245	172				1613						
250	176				1663						
255	179				1714						
260	183				1769						
265	186				1825						
270	190				1884						
274	193	Max.758mm			1933						
210	148	Min.560mm	CNPA350-250-640	1760	1125			NM12-159	1187	NM12-159	1207
215	151	UL:211~271psi FM:210~230psi			1165						
220	155				1204						
225	158				1241						
230	162				1276						
235	165				1311						
240	169				1345						
245	172				1377						
250	176				1408						
255	179				1446						
260	183				1485						
265	186				1528						
270	190				1571						
271	191	Max.630mm			1581						

The contents of this publication must not be regarded as binding. EBARA ENGINEERING SINGAPORE PTE. LTD. reserves the right to effect any modification it deems necessary, without prior notice.

EBARA CNPAx DOUBLE SUCTION HORIZONTAL SPLIT CASE CENTRIFUGAL
UL LISTED/FM APPROVED FIRE PUMPS DRIVRE SELECTION TABLE

UL LISTED

FM APPROVED

RATED FLOW: 7500us.gpm(1703m3/h)

HEAD (UL&FM)		IMPELLER	PUMP (UL&FM)	SPEED	MAX SHAFT POWER	MOTOR DRIVER (UL)		DIESEL ENGINE DRIVER (UL/FM/T3)			
psi	meter	Dia.mm	MODEL CNPAx	rpm	hp	MODEL NEMA SF:1.15 ODP/TEFC	hp	MODEL (UL&FM)	hp	MODEL (UL/T3)	hp
109	77	Min.540mm	CNPA400-350-640	1480	627			NM6-159B	680	NM6-159B	680
115	81	UL:55~87psi FM:54~86psi			664						
120	84				695			NM6-150B	780	NM6-150	719
125	88				727					NM6-150B	780
130	91				759						
135	95				791			NM12-159B NM12-150	909 980	NM12-159B NM12-150	909 980
140	98				822						
145	102				854						
150	106				886						
155	109				920			NM12-150	980	NM12-150	980
160	113				953						
165	116				986			NM12-159	1036	NM12-159	1036
170	120				1020						
175	123				1055						
179	126	Max.655mm			1082						
193	136	660mm UL:195psi	CNPA350-250-640	1480	1074						
197	139	Min.650mm	CNPA400-300-750	1480	1247						
200	141	UL:197-272psi			1266						
205	144				1299						
210	148				1335						
215	151				1373						
220	155				1413						
225	158				1455						
230	162				1499						
235	165				1544						
240	169				1591						
245	172				1640						
250	176				1690						
255	179				1741						
260	183				1795						
265	186				1851						
270	190				1909						
272	191	Max.758mm			1933						
204	144	Min.560mm	CNPA350-250-640	1760	1129			NM12-159	1187	NM12-159	1207
210	148	UL:205-267psi FM:205-224psi			1172						
215	151				1211						
220	155				1248						
225	158				1284						
230	162				1317						
235	165				1348						
240	169				1379						
245	172				1408						
250	176				1445						
255	179		CNPA350-250-640	1760	1483						
260	183				1524						
265	186				1569						
267	188	Max.630mm	CNPA350-250-640	1760	1588						

The contents of this publication must not be regarded as binding. EBARA E NGINEERING SINGAPORE PTE. LTD. reserves the right to effect any modification it deems necessary, without prior notice.

EBARA CNPAx DOUBLE SUCTION HORIZONTAL SPLIT CASE CENTRIFUGAL UL LISTED/FM APPROVED FIRE PUMPS DRIVRE SELECTION TABLE

UL LISTED

FM APPROVED

RATED FLOW: 8000us.gpm(1817m3/h)

HEAD (UL&FM)		IMPELLER	PUMP (UL&FM)	SPEED	MAX SHAFT POWER	MOTOR DRIVER (UL)		DIESEL ENGINE DRIVER (UL/FM/T3)			
psi	meter	Dia.mm	MODEL CNPAx	rpm	hp	MODEL NEMA SF:1.15 ODP/TEFC	hp	MODEL (UL&FM)	hp	MODEL (UL/T3)	hp
223	157	Min.695mm	CNPA400-300-750	1480	1464						
225	158	UL:55~87psi FM:54~86psi			1482						
230	162				1526						
235	165				1573						
240	169				1621						
245	172				1671						
250	176				1723						
255	179				1776						
260	183				1830						
265	186				1887						
269	189	Max.758mm			1933						
117	82	Min.540mm	CNPA400-350-640	1540	705			NM12-150	1003	NM12-150	1003
120	84	UL:117-192psi			723						
125	88				755						
130	91				788						
135	95				821						
140	98				854						
145	102				888						
150	106				923						
155	109				957						
160	113				992			NM12-159	1036	NM12-159	1036
165	116				1027						
170	120				1063						
175	123				1098						
180	127				1133						
185	130				1169						
192	135	Max.655mm			1220						
239	168	Min.560mm	CNPA350-250-640	1760	1409						
240	169	FM:239-261psi			1415						
245	172				1450						
250	176				1489						
255	179				1532						
260	183				1578						
261	184	Max.630mm			1588						

ATTENTION:

1: A deduction of 3% from engine horsepower rating at standard SAE conditions shall be made for diesel engines for each 1000ft.(305m) altitude above 300ft.(91.4m).

2: A deduction of 1 percent from engine horsepower rating as corrected to standard SAE conditions shall be made for diesel engines for every 10°F(5.6°C) above 77°F(25°C)ambient temperature.

3: NM-XXX-EC,T3,NMFIRE

4: CFP-F,T3,CUMMINS FIRE

The contents of this publication must not be regarded as binding. EBARA E NGINEERING SINGAPORE PTE. LTD. reserves the right to effect any modification it deems necessary, without prior notice.

PERFORMANCE CURVES - CNPAX

CNPA100-80-250

UL LISTED FM APPROVED

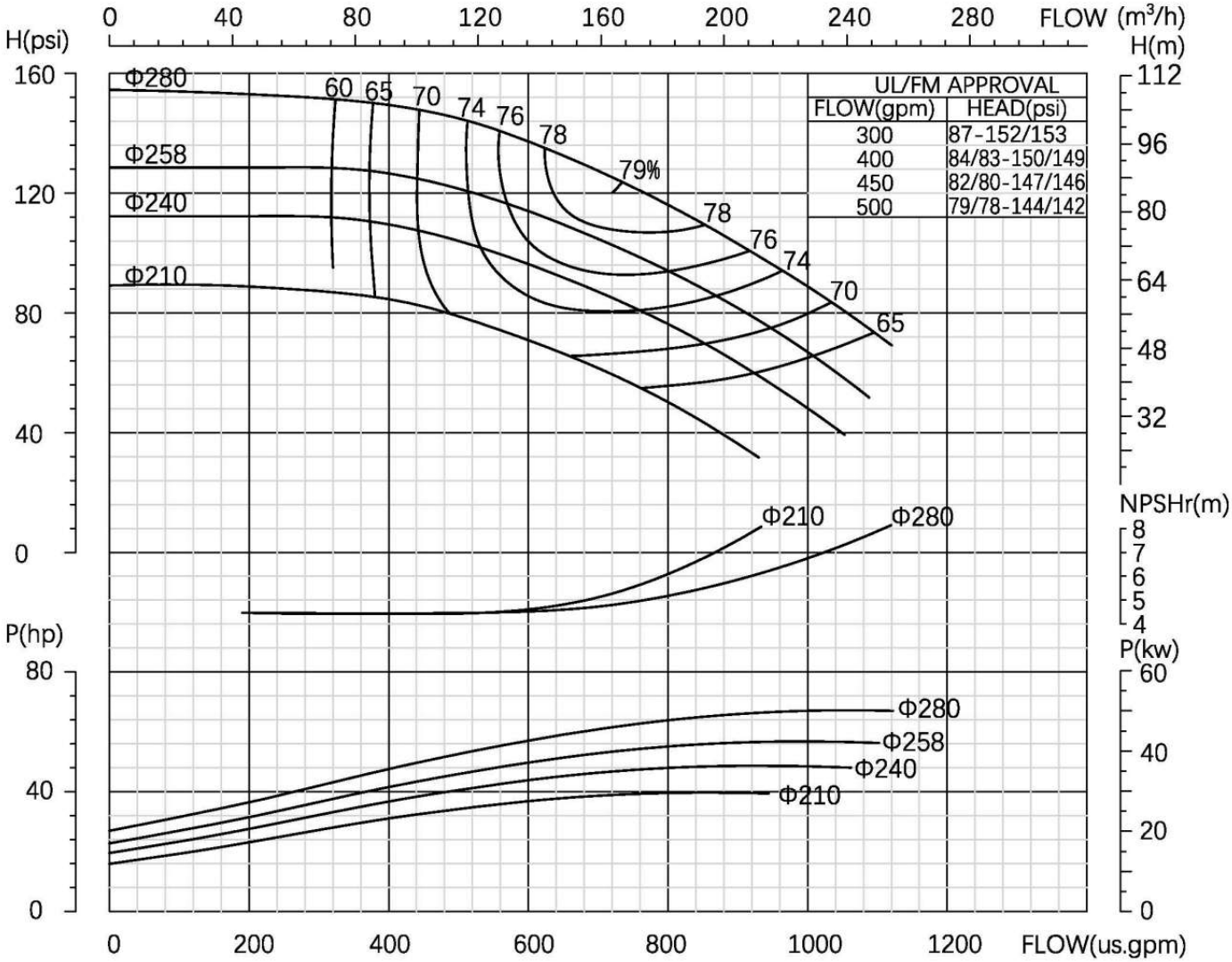

Flange rating(suction/discharge) : class 250，RF
Size : 4x3inch
Stages : 1
Frequency : 50Hz
Speed,rated : 2980rpm
Max working pressure,allowable : 305psi
Max suction pressure,allowable : 75psi
Max brake horse power : 39~67hp

Curve No.: CNPA235001@CNPA100-80-250@2980rpm@300→500usgpm

The contents of this publication must not be regarded as binding. EBARA ENGINEERING SINGAPORE PTE. LTD. reserves the right to effect any modification it deems necessary, without prior notice.

PERFORMANCE CURVES - CNPAX

CNPA125-80-200

UL LISTED FM APPROVED

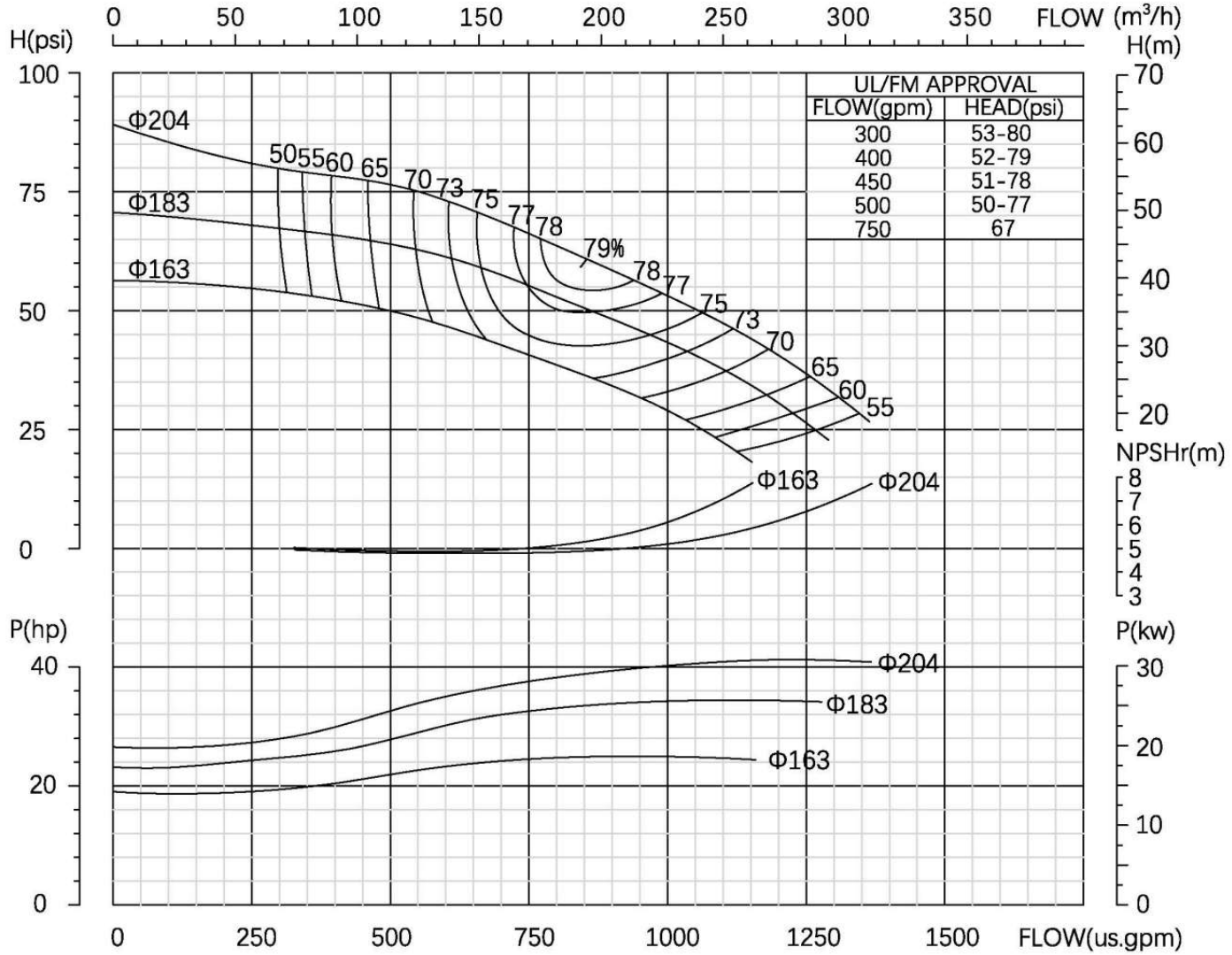

Flange rating(suction/discharge) : class 250，RF
Size : 5x3inch
Stages : 1
Frequency : 50Hz
Speed,rated : 2980rpm
Max working pressure,allowable : 200psi
Max suction pressure,allowable : 75psi
Max brake horse power : 25~41hp

Curve No.: CNPA205001@CNPA125-80-200@2980RPM@300→750usGPM

The contents of this publication must not be regarded as binding. EBARA ENGINEERING SINGAPORE PTE. LTD. reserves the right to effect any modification it deems necessary, without prior notice.

PERFORMANCE CURVES - CNPAx

CNPA125-80-250

UL LISTED FM APPROVED

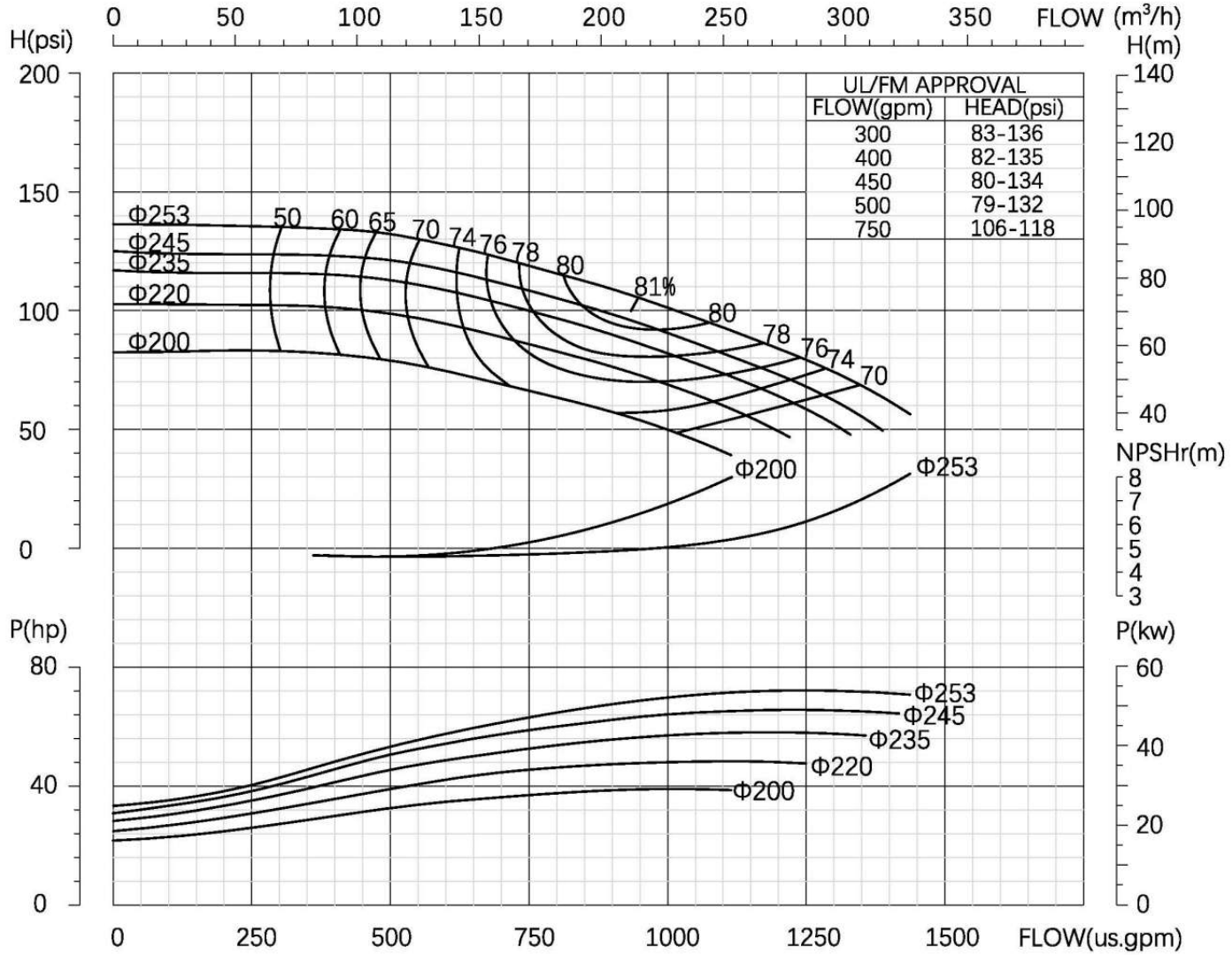

Flange rating(suction/discharge) : class 250，RF
Size : 5x3inch
Stages : 1
Frequency : 50Hz
Speed,rated : 2950rpm
Max working pressure,allowable : 280psi
Max suction pressure,allowable : 75psi
Max brake horse power : 39~72hp

Curve No.: CNPA205002@CNPA125-80-250@2950rpm@300→750usgpm

The contents of this publication must not be regarded as binding. EBARA ENGINEERING SINGAPORE PTE. LTD. reserves the right to effect any modification it deems necessary, without prior notice.

PERFORMANCE CURVES - CNPAx

CNPA125-80-350

UL LISTED FM APPROVED

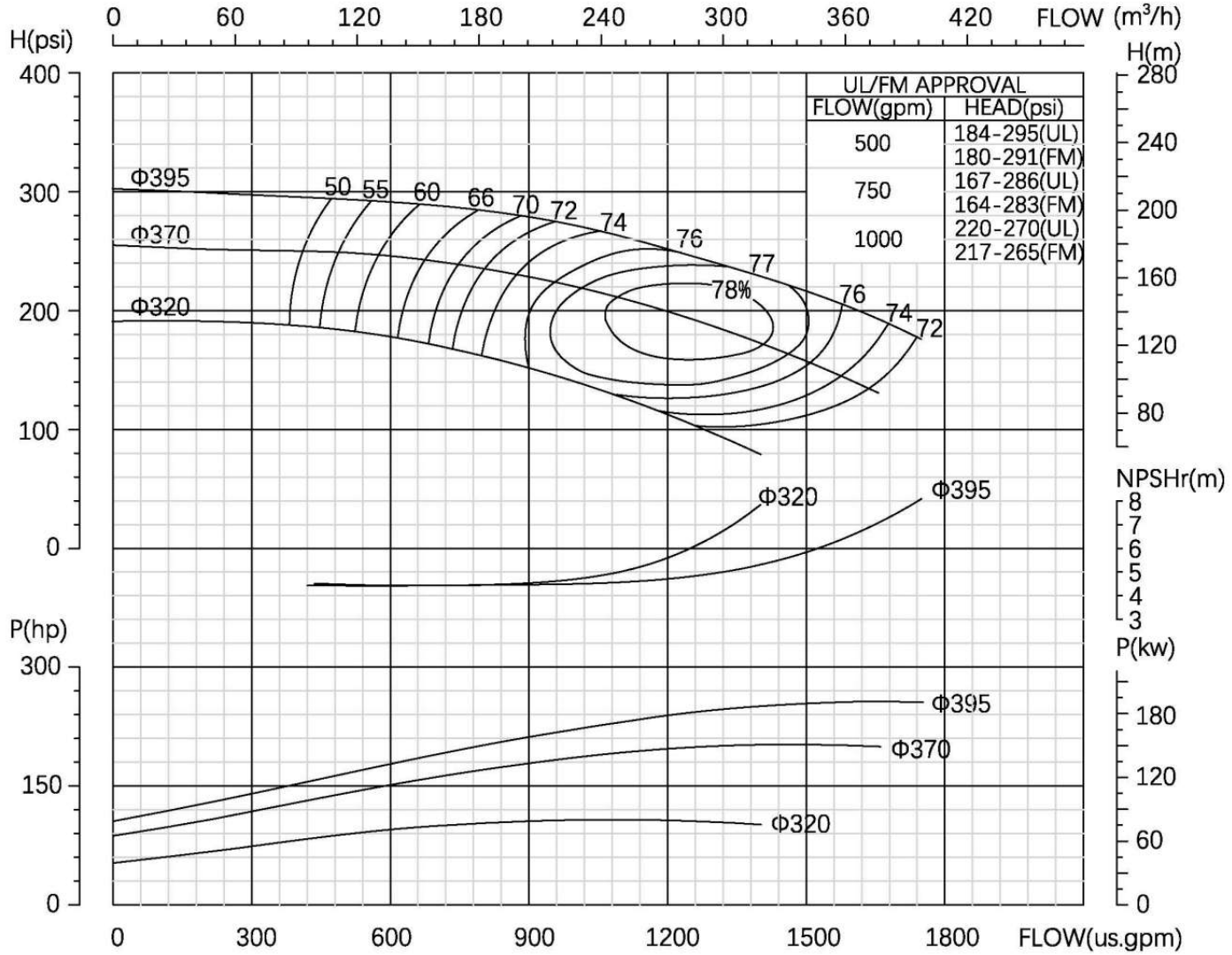

Flange rating(suction/discharge) : class 250，RF
Size : 5x3inch
Stages : 1
Frequency : 50Hz
Speed,rated : 2950rpm
Max working pressure,allowable : 380psi
Max suction pressure,allowable : 75psi
Max brake horse power : 108~257hp

Curve No.: CNPA205003@CNPA125-80-350@2950rpm@500→1000usgpm

The contents of this publication must not be regarded as binding. EBARA ENGINEERING SINGAPORE PTE. LTD. reserves the right to effect any modification it deems necessary, without prior notice.

PERFORMANCE CURVES - CNPAx

CNPA125-100-300

UL LISTED FM APPROVED

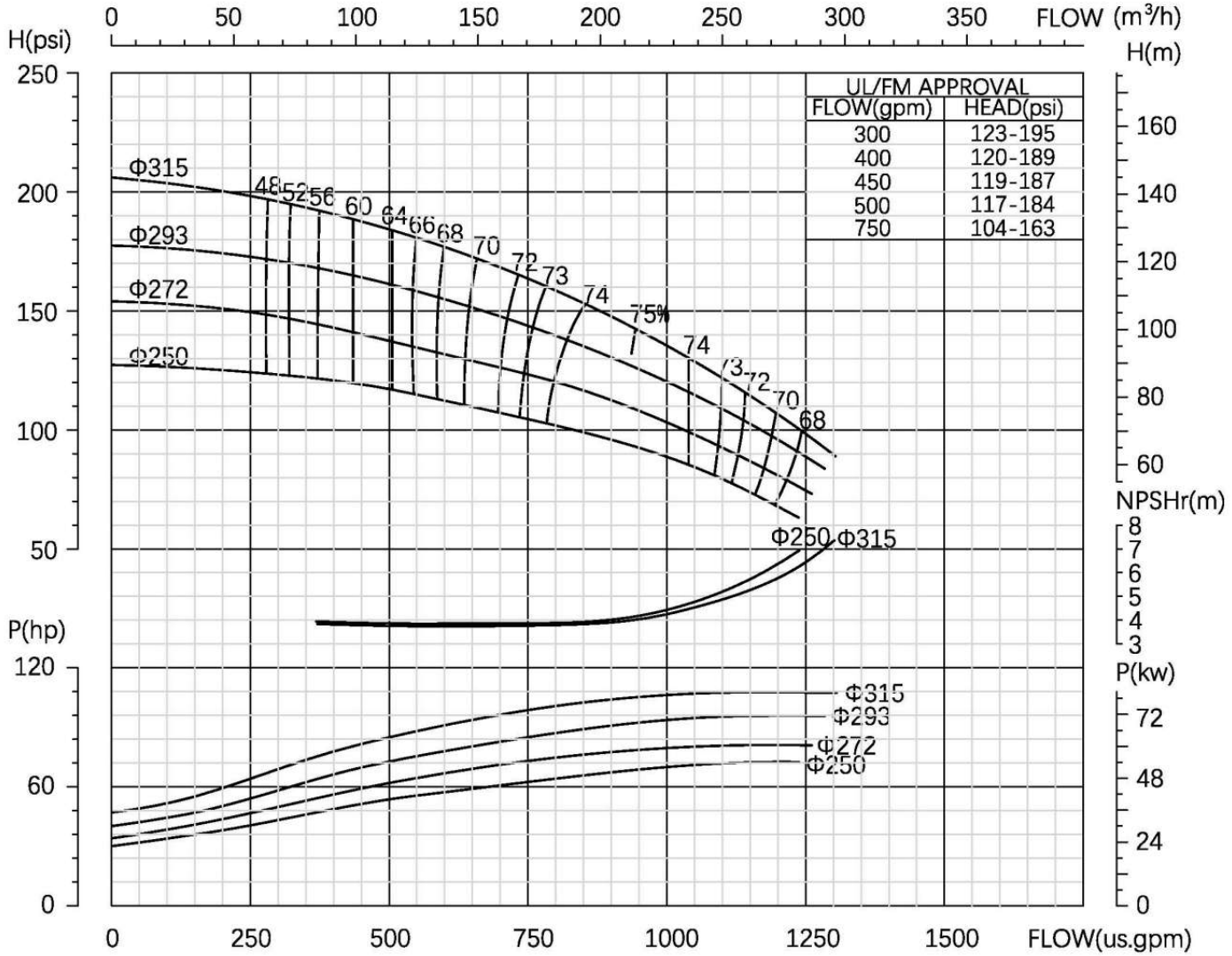

Flange rating(suction/discharge) : class 250，RF
Size : 5x4inch
Stages : 1
Frequency : 50Hz
Speed,rated : 2980rpm
Max working pressure,allowable : 400psi
Max suction pressure,allowable : 75psi
Max brake horse power : 73~107hp

Curve No.: CNPA235005@CNPA125-100-300@2980rpm@300→750usgpm

The contents of this publication must not be regarded as binding. EBARA ENGINEERING SINGAPORE PTE. LTD. reserves the right to effect any modification it deems necessary, without prior notice.

PERFORMANCE CURVES - CNPAx

CNPA150-125-250

UL LISTED FM APPROVED

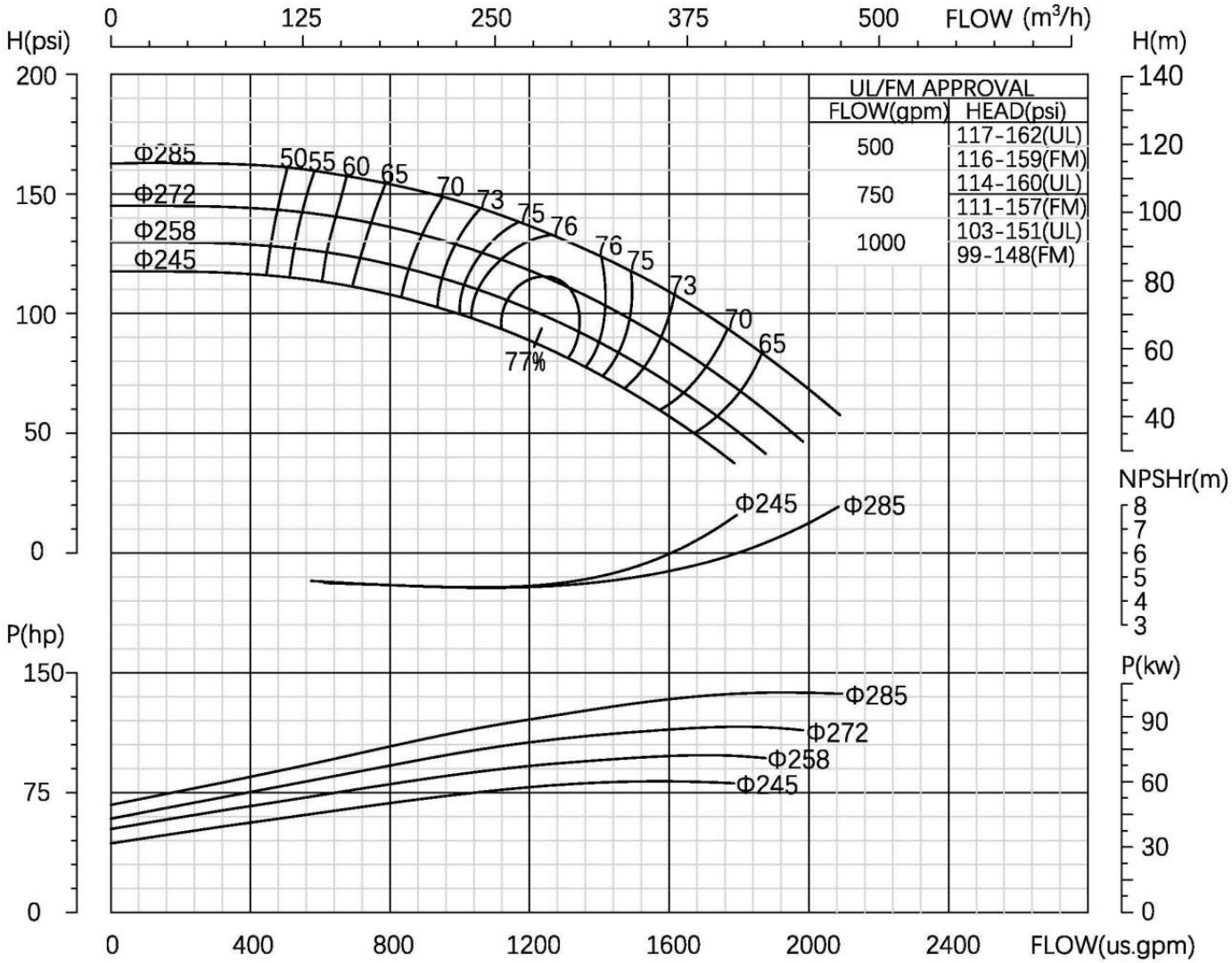

Flange rating(suction/discharge) : class 250，RF
Size : 6x5inch
Stages : 1
Frequency : 50Hz
Speed,rated : 2980rpm(UL),2950rpm(FM)
Max working pressure,allowable : 310psi
Max suction pressure,allowable : 75psi
Max brake horse power : 82~138hp

Curve No.: CNPA235007@CNPA150-125-250@2950-2980rpm@500→1000usgpm

The contents of this publication must not be regarded as binding. EBARA ENGINEERING SINGAPORE PTE. LTD. reserves the right to effect any modification it deems necessary, without prior notice.

PERFORMANCE CURVES - CNPAx

CNPA150-125-310

UL LISTED FM APPROVED

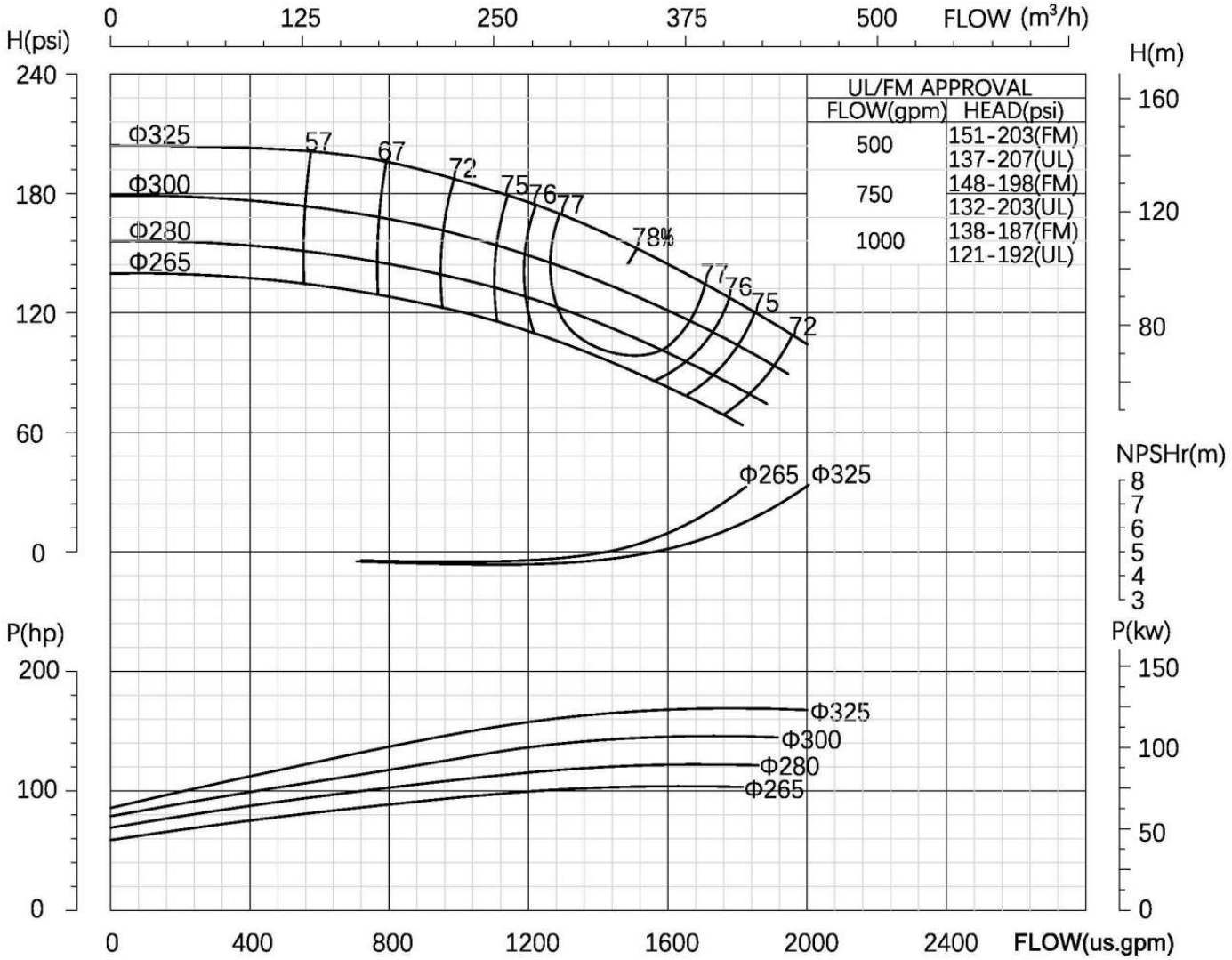

Flange rating(suction/discharge) :	class 250，RF
Size :	6x5inch
Stages :	1
Frequency :	50Hz
Speed,rated :	2950rpm(FM),2980rpm(UL)
Max working pressure,allowable :	370psi
Max suction pressure,allowable :	75psi
Max brake horse power :	104~169hp

Curve No.: CNPA205008@CNPA150-125-310@2950-2980rpm@500→1000usgpm

The contents of this publication must not be regarded as binding. EBARA ENGINEERING SINGAPORE PTE. LTD. reserves the right to effect any modification it deems necessary, without prior notice.

PERFORMANCE CURVES - CNPAx

CNPA150-125-400

UL LISTED FM APPROVED

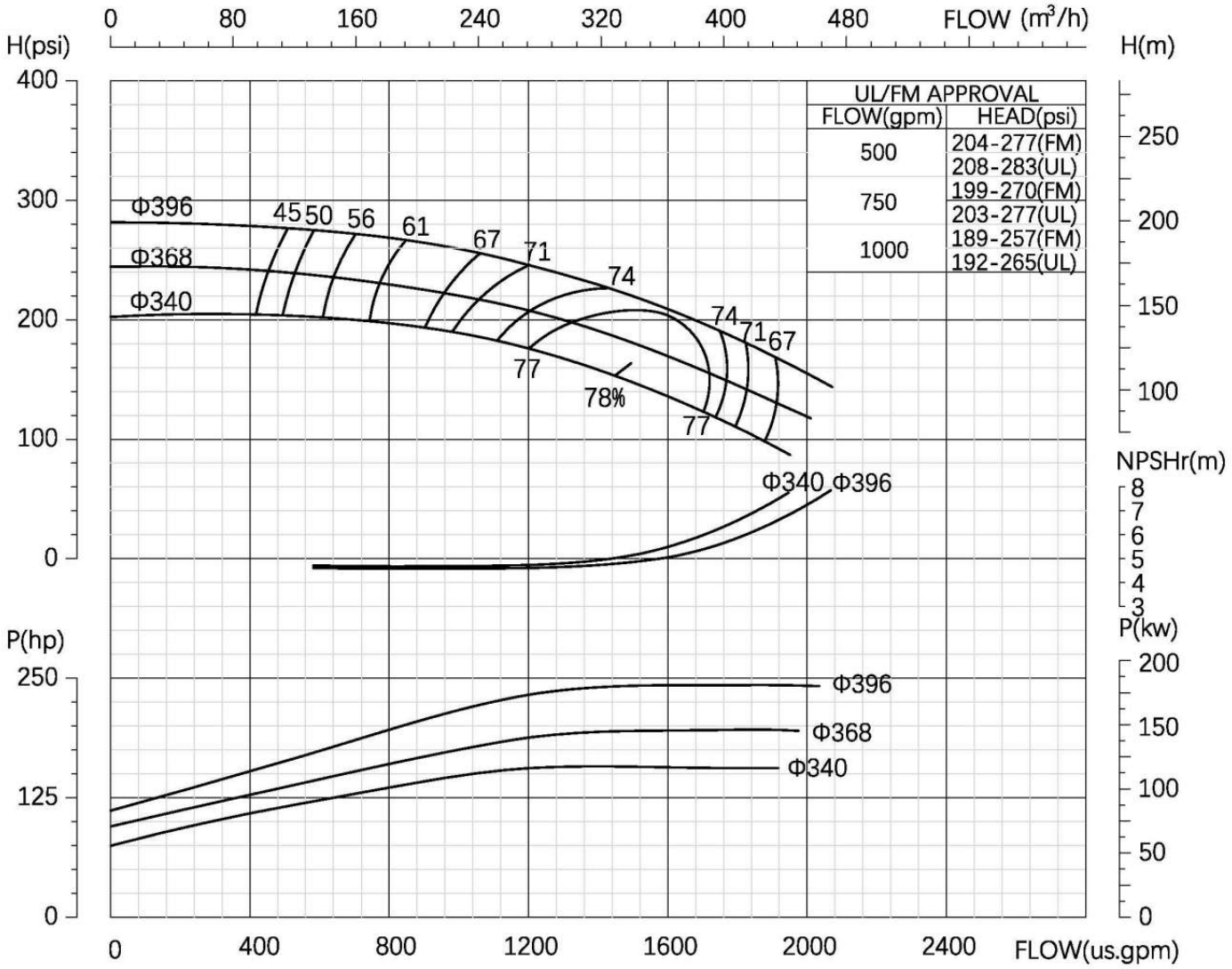

Flange rating(suction/discharge) :	class 250，RF
Size :	6x5inch
Stages :	1
Frequency :	50Hz
Speed,rated :	2950rpm(FM),2980rpm(UL)
Max working pressure,allowable :	370psi
Max suction pressure,allowable :	75psi
Max brake horse power :	163~241hp

Curve No.: CNPA205009@CNPA150-125-400@2950-2980rpm@500→1000usgpm

The contents of this publication must not be regarded as binding. EBARA ENGINEERING SINGAPORE PTE. LTD. reserves the right to effect any modification it deems necessary, without prior notice.

PERFORMANCE CURVES - CNPAx

CNPA200-150-250

UL LISTED FM APPROVED

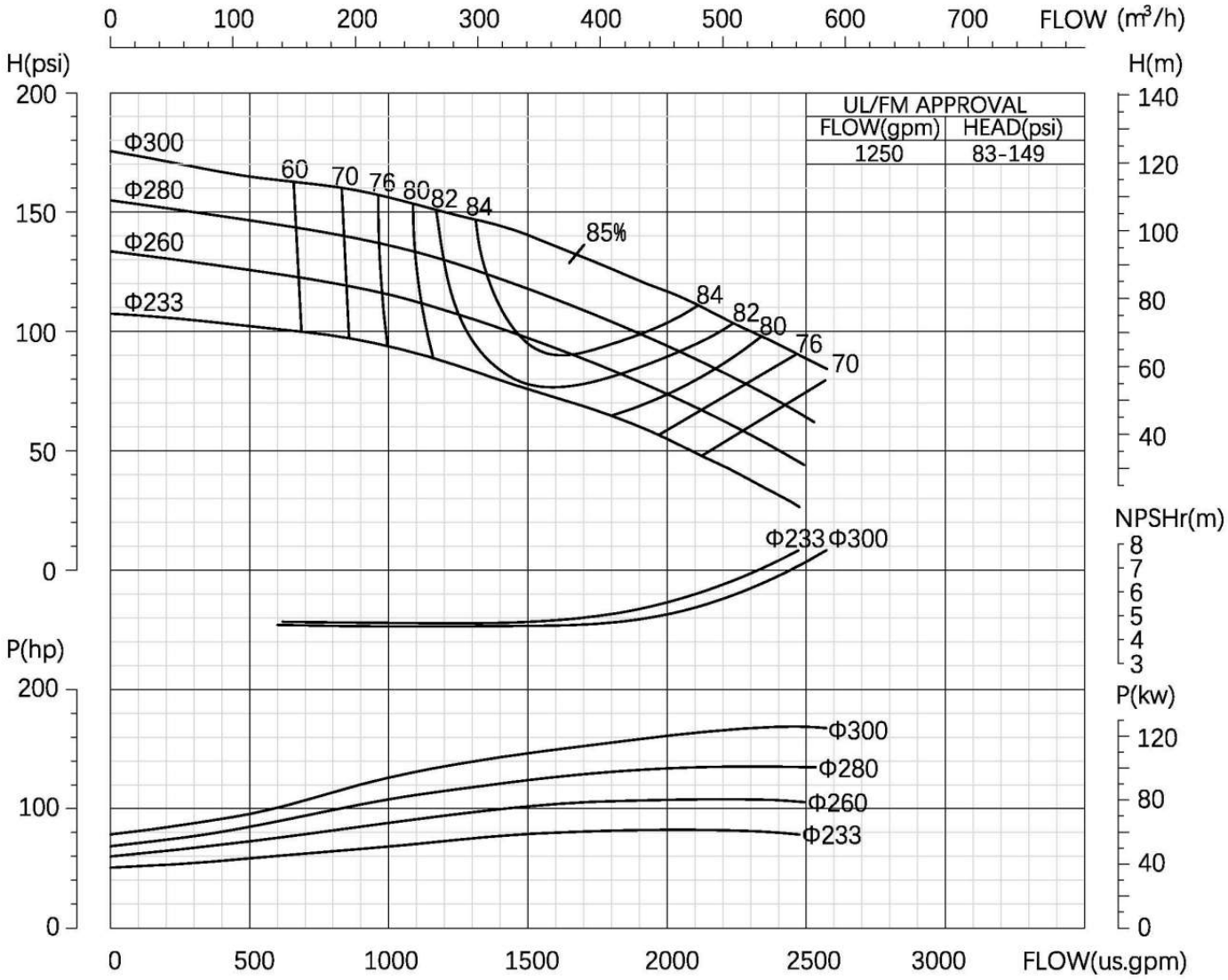

Flange rating(suction/discharge)	: class 250，RF
Size	: 8x6inch
Stages	: 1
Frequency	: 50Hz
Speed,rated	: 2950rpm
Max working pressure,allowable	: 330psi
Max suction pressure,allowable	: 75psi
Max brake horse power	: 82-168hp

Curve No.: CNPA205010@CNPA200-150-250@2950rpm@1250usgpm

The contents of this publication must not be regarded as binding. EBARA ENGINEERING SINGAPORE PTE. LTD. reserves the right to effect any modification it deems necessary, without prior notice.

PERFORMANCE CURVES - CNPAx

CNPA200-150-250G

UL LISTED FM APPROVED

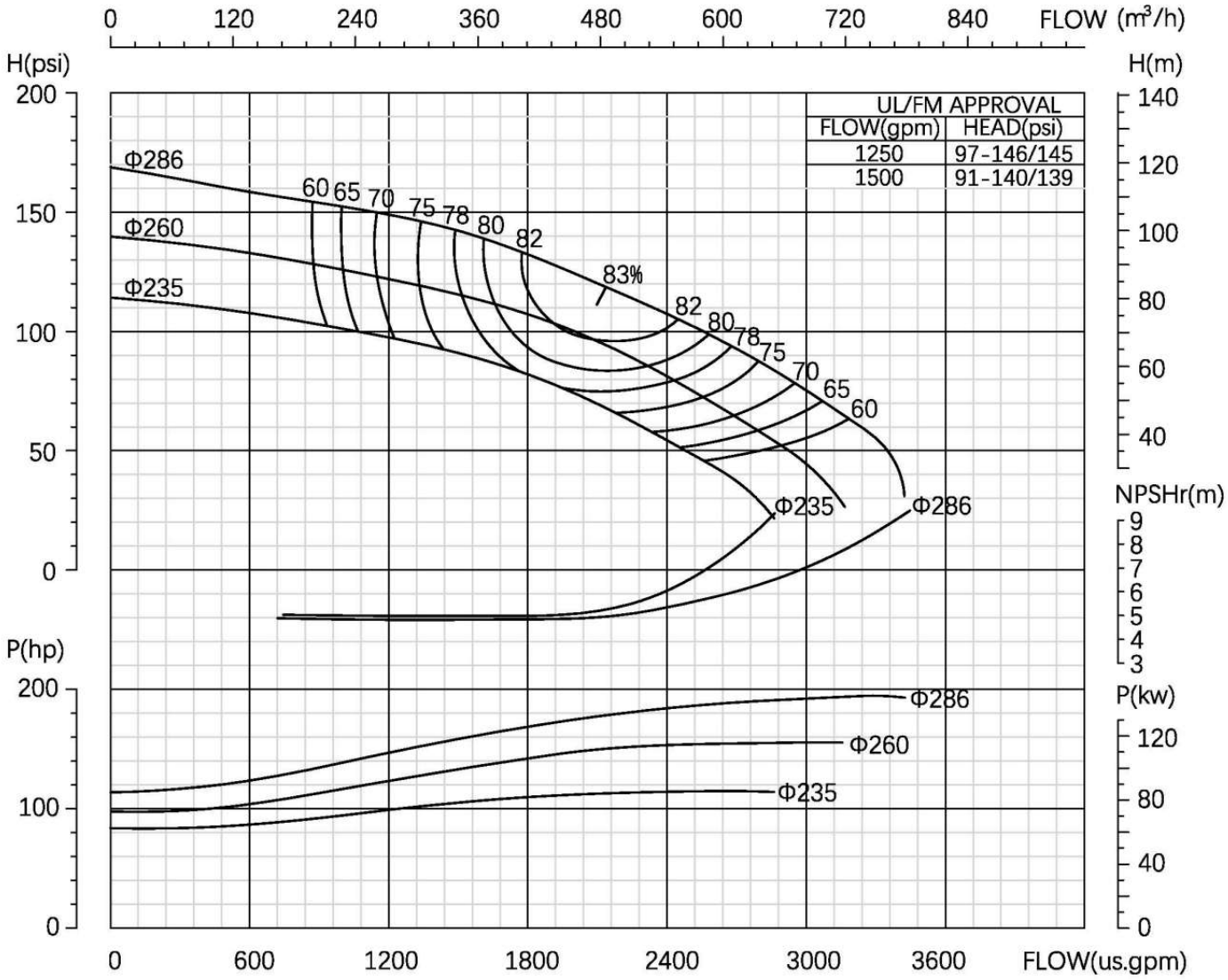

Flange rating(suction/discharge)	: class 250，RF
Size	: 8x6inch
Stages	: 1
Frequency	: 50Hz
Speed,rated	: 2950rpm
Max working pressure,allowable	: 290psi
Max suction pressure,allowable	: 75psi
Max brake horse power	: 115-194hp

Curve No.: CNPA235010@CNPA200-150-250G@2950rpm@1250→1500usgpm

The contents of this publication must not be regarded as binding. EBARA ENGINEERING SINGAPORE PTE. LTD. reserves the right to effect any modification it deems necessary, without prior notice.

PERFORMANCE CURVES - CNPAx

CNPA200-150-310

UL LISTED FM APPROVED

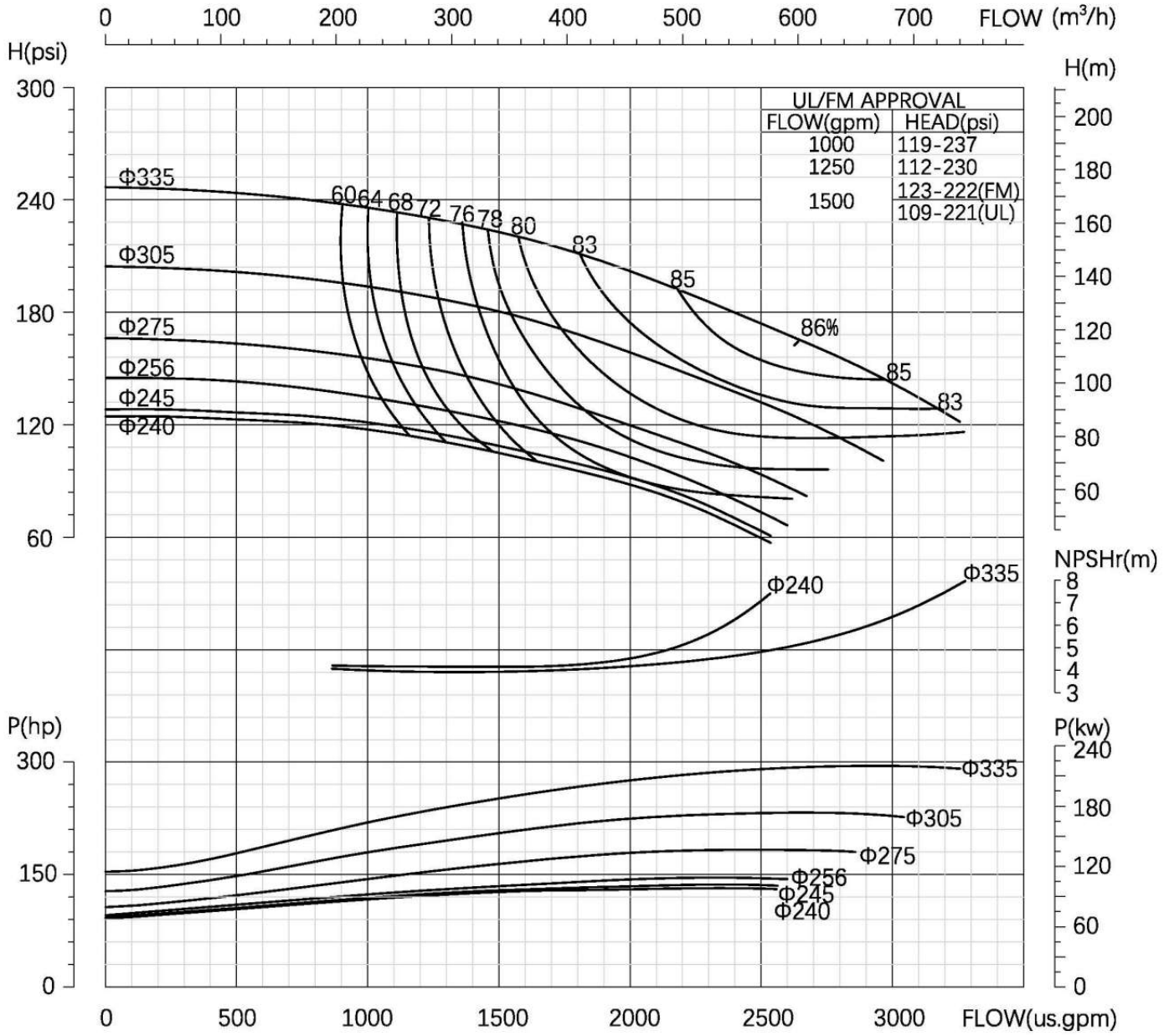

Flange rating(suction/discharge)	: class 250，RF
Size	: 8x6inch
Stages	: 1
Frequency	: 50Hz
Speed,rated	: 2980rpm
Max working pressure,allowable	: 370psi
Max suction pressure,allowable	: 75psi
Max brake horse power	: 133~295hp

Curve No.: CNPA205011@CNPA200-150-310@2980rpm@1000→1500usgpm

The contents of this publication must not be regarded as binding. EBARA ENGINEERING SINGAPORE PTE. LTD. reserves the right to effect any modification it deems necessary, without prior notice.

PERFORMANCE CURVES - CNPAX

CNPA200-150-330

UL LISTED FM APPROVED

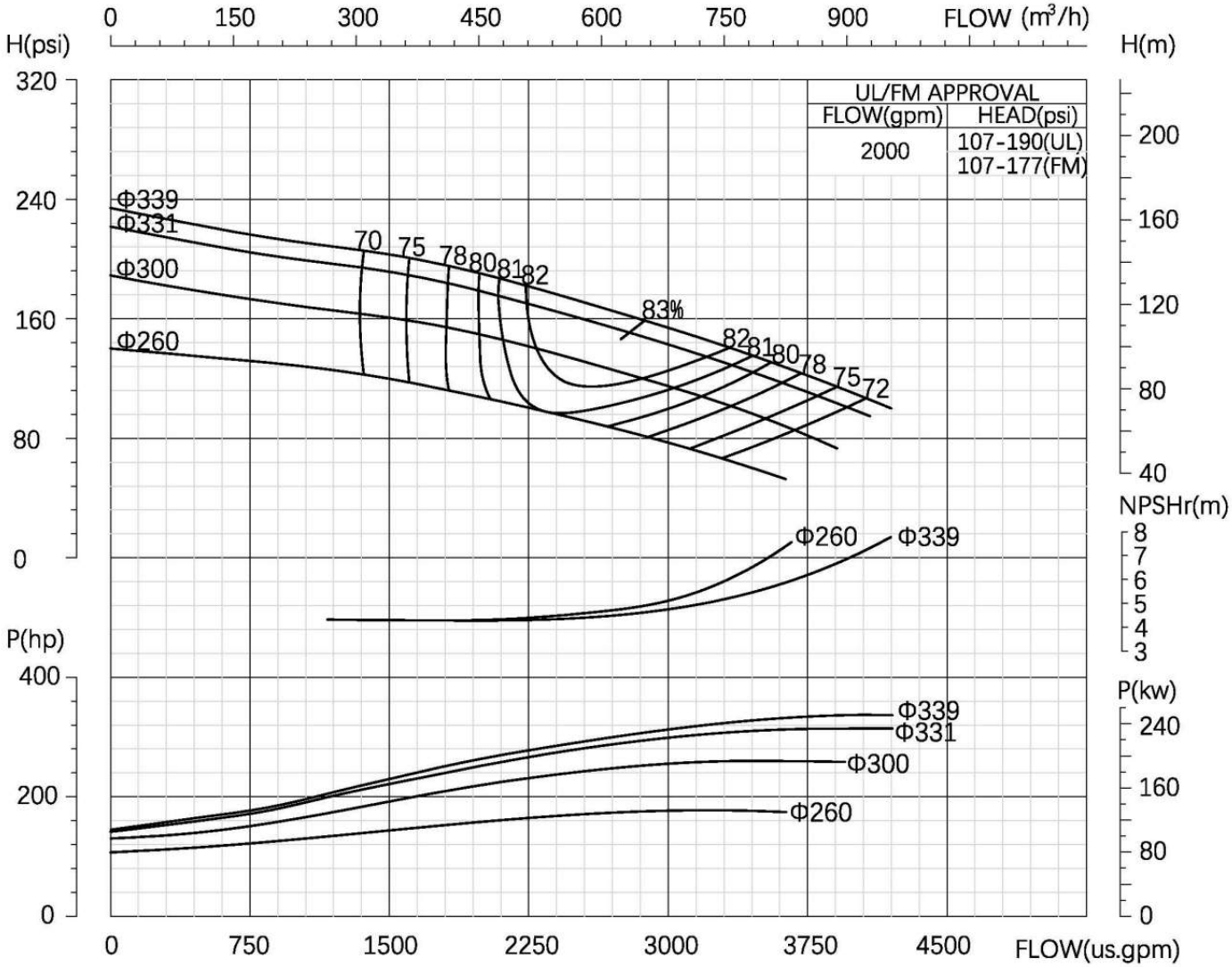

Flange rating(suction/discharge) : class 250，RF
Size : 8x6inch
Stages : 1
Frequency : 50Hz
Speed,rated : 2950rpm
Max working pressure,allowable : 310psi
Max suction pressure,allowable : 75psi
Max brake horse power : 173-337hp

Curve No.: CNPA205012@CNPA200-150-330@2950rpm@2000usgpm

The contents of this publication must not be regarded as binding. EBARA ENGINEERING SINGAPORE PTE. LTD. reserves the right to effect any modification it deems necessary, without prior notice.

PERFORMANCE CURVES - CNPAx

CNPA200-150-420

UL LISTED FM APPROVED

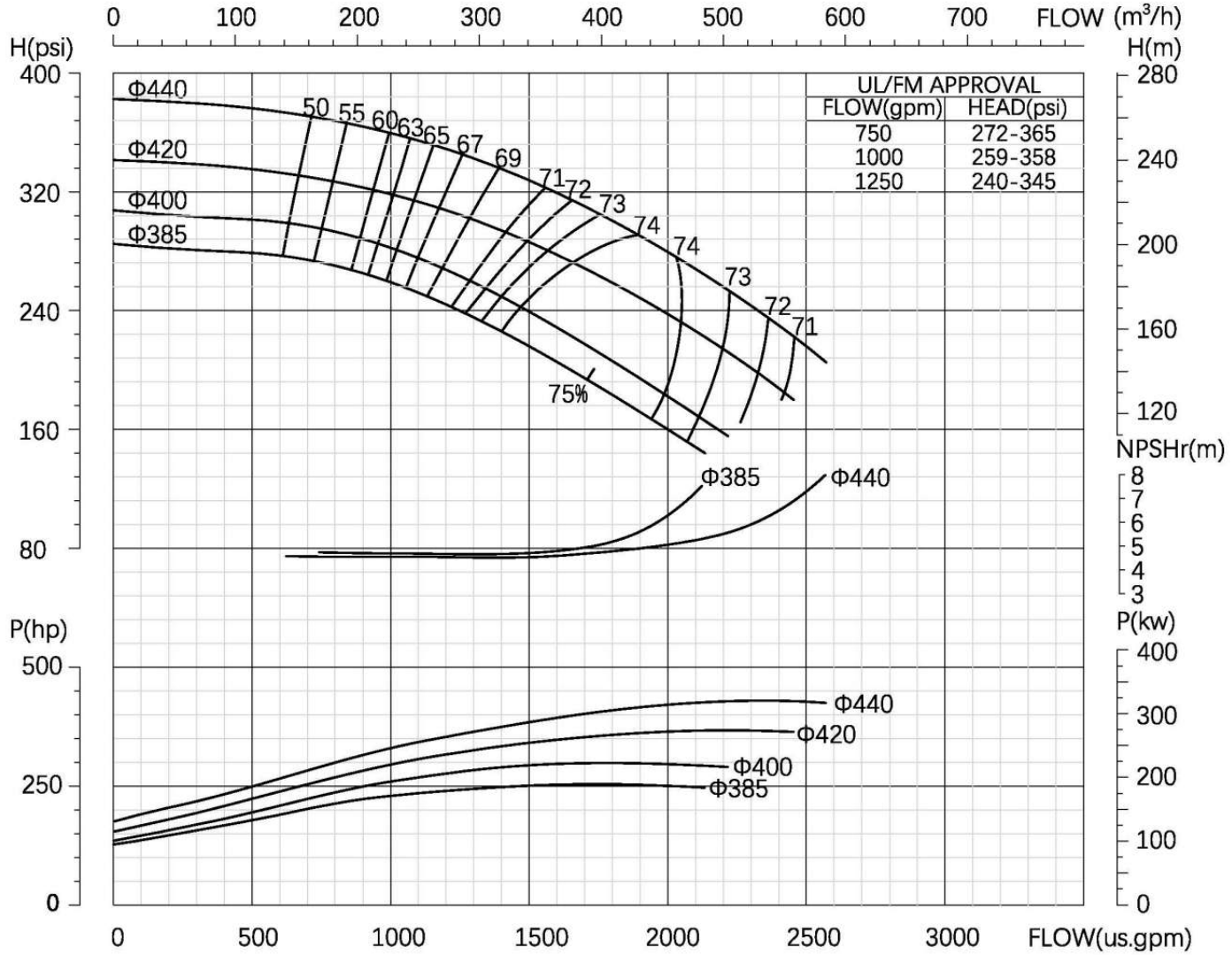

Flange rating(suction/discharge) : class 250，RF
Size : 8x6inch
Stages : 1
Frequency : 50Hz
Speed,rated : 2950rpm
Max working pressure,allowable : 465psi
Max suction pressure,allowable : 75psi
Max brake horse power : 252-429hp

Curve No.: CNPA205013@CNPA200-150-420@2950rpm@750→1250usgpm

The contents of this publication must not be regarded as binding. EBARA ENGINEERING SINGAPORE PTE. LTD. reserves the right to effect any modification it deems necessary, without prior notice.

PERFORMANCE CURVES - CNPAX

CNPA200-150-420G

UL LISTED FM APPROVED

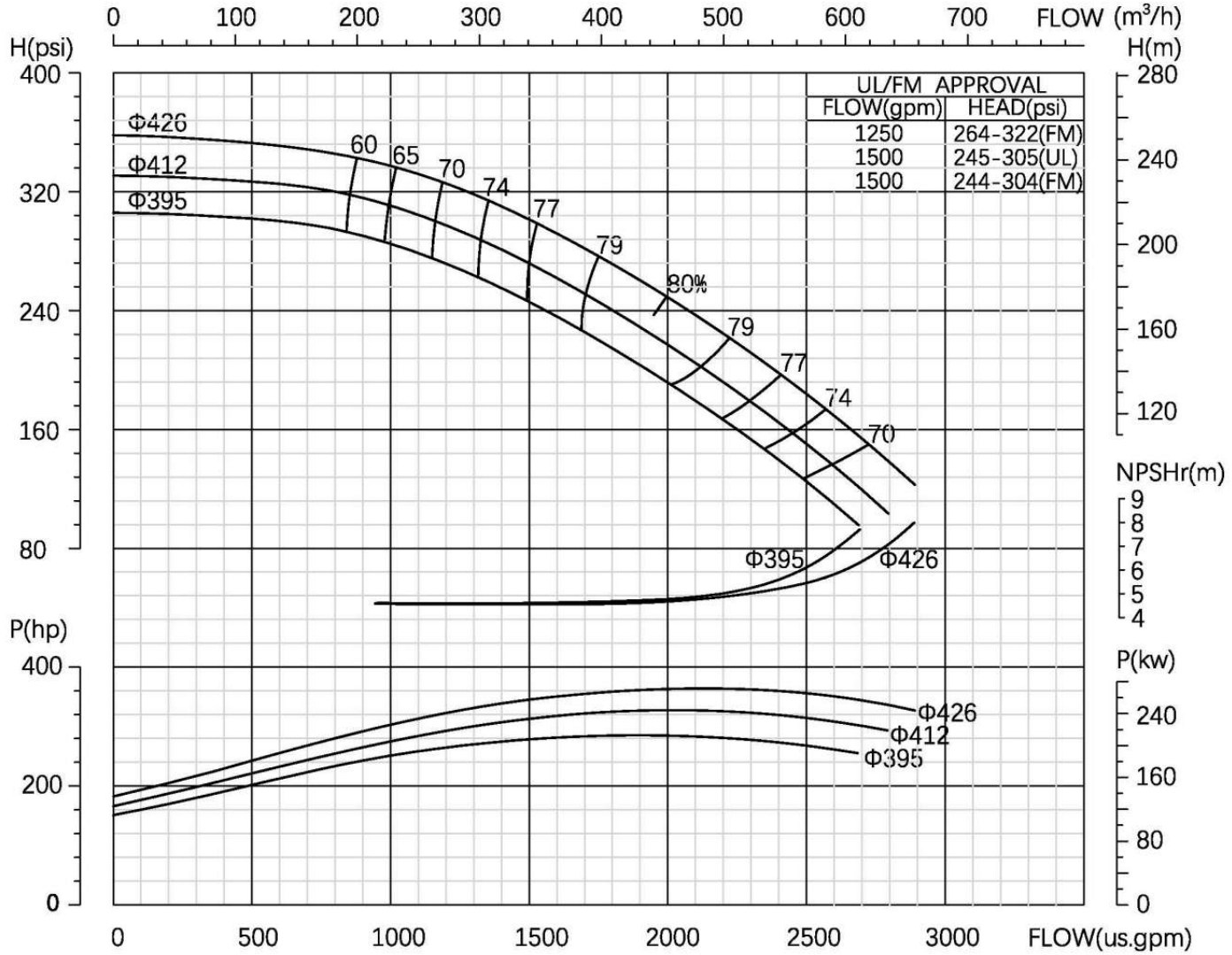

Flange rating(suction/discharge)	: class 250，RF
Size	: 8x6inch
Stages	: 1
Frequency	: 50Hz
Speed,rated	: 2950rpm
Max working pressure,allowable	: 435psi
Max suction pressure,allowable	: 75psi
Max brake horse power	: 283-362hp

Curve No.: CNPA235024@CNPA200-150-420G@2950rpm@1250→1500usgpm

The contents of this publication must not be regarded as binding. EBARA ENGINEERING SINGAPORE PTE. LTD. reserves the right to effect any modification it deems necessary, without prior notice.

PERFORMANCE CURVES - CNPAx

CNPA200-150-600

UL LISTED FM APPROVED

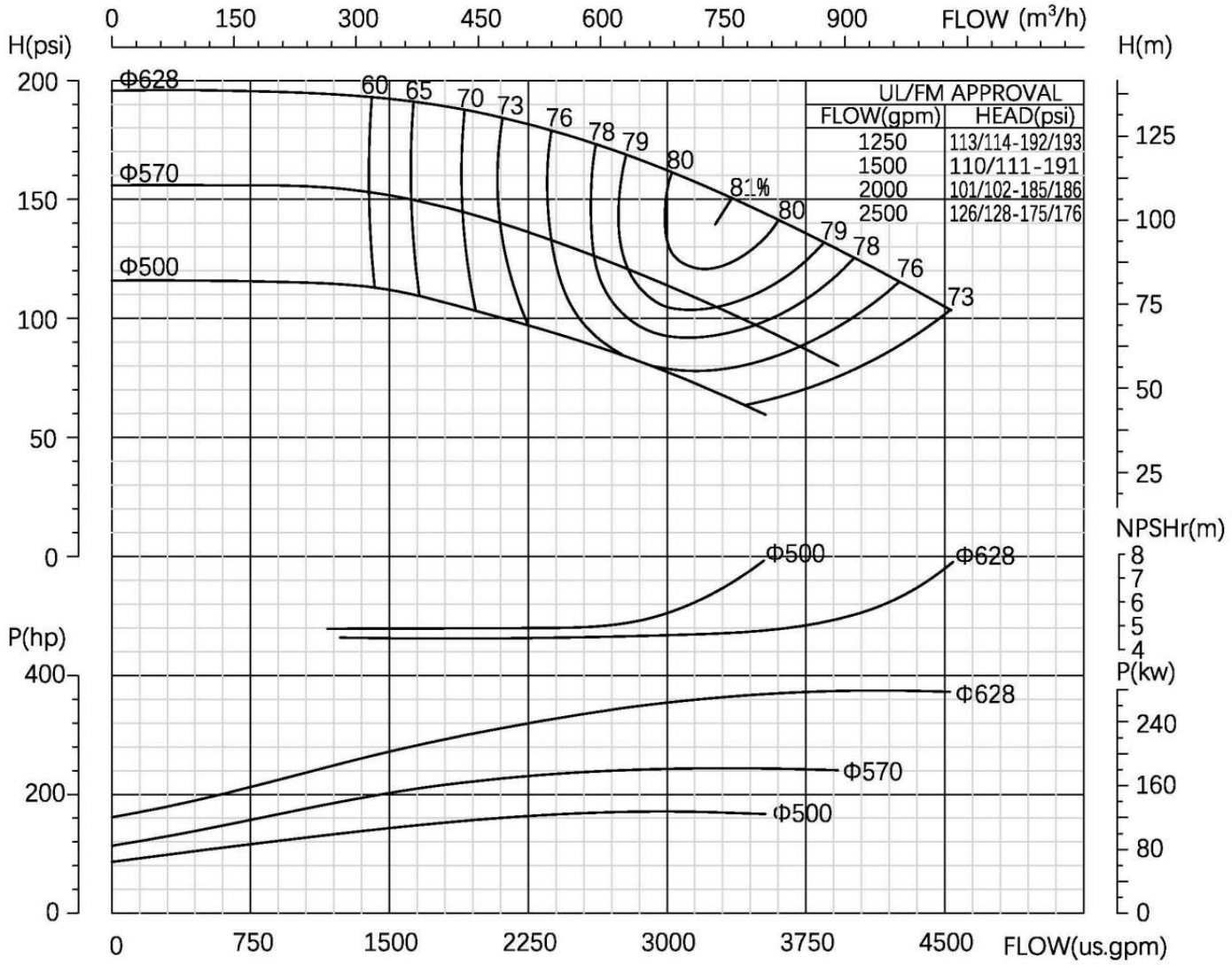

Flange rating(suction/discharge) : class 250，RF
Size : 8x6inch
Stages : 1
Frequency : 50Hz
Speed,rated : 1480rpm
Max working pressure,allowable : 290psi
Max suction pressure,allowable : 75psi
Max brake horse power : 171~373hp

Curve No.: CNPA235025@CNPA200-150-600@1480rpm@1250→2500usgpm

The contents of this publication must not be regarded as binding. EBARA ENGINEERING SINGAPORE PTE. LTD. reserves the right to effect any modification it deems necessary, without prior notice.

PERFORMANCE CURVES - CNPAx

CNPA200-150-640

UL LISTED FM APPROVED

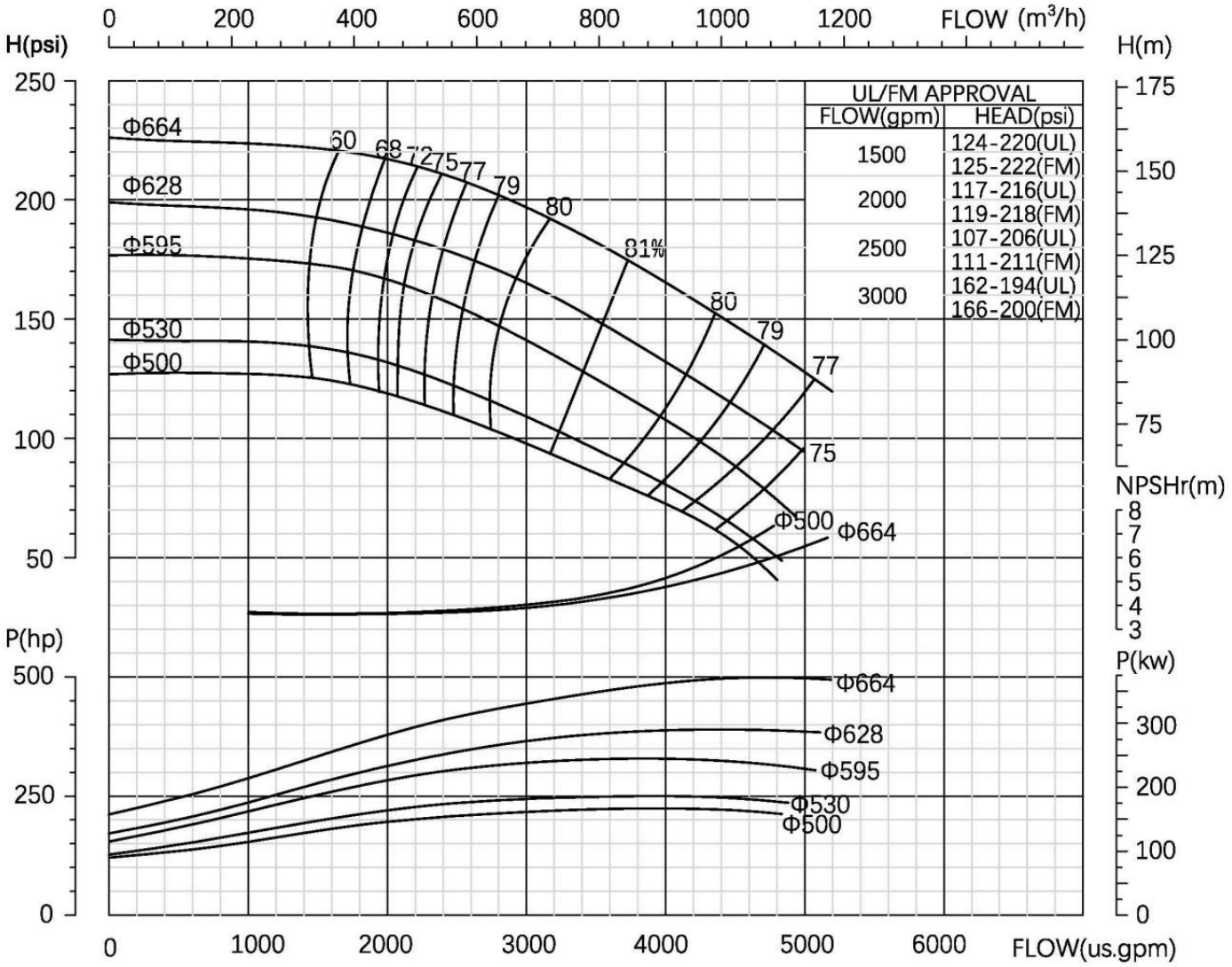

Flange rating(suction/discharge) : class 250，RF
Size : 8x6inch
Stages : 1
Frequency : 50Hz
Speed,rated : 1480rpm
Max working pressure,allowable : 305psi
Max suction pressure,allowable : 75psi
Max brake horse power : 220-497hp

Curve No.: CNPA205014@CNPA200-150-640@1480rpm@1500→3000usgpm

The contents of this publication must not be regarded as binding. EBARA ENGINEERING SINGAPORE PTE. LTD. reserves the right to effect any modification it deems necessary, without prior notice.

PERFORMANCE CURVES - CNPAx

CNPA250-200-350

UL LISTED FM APPROVED

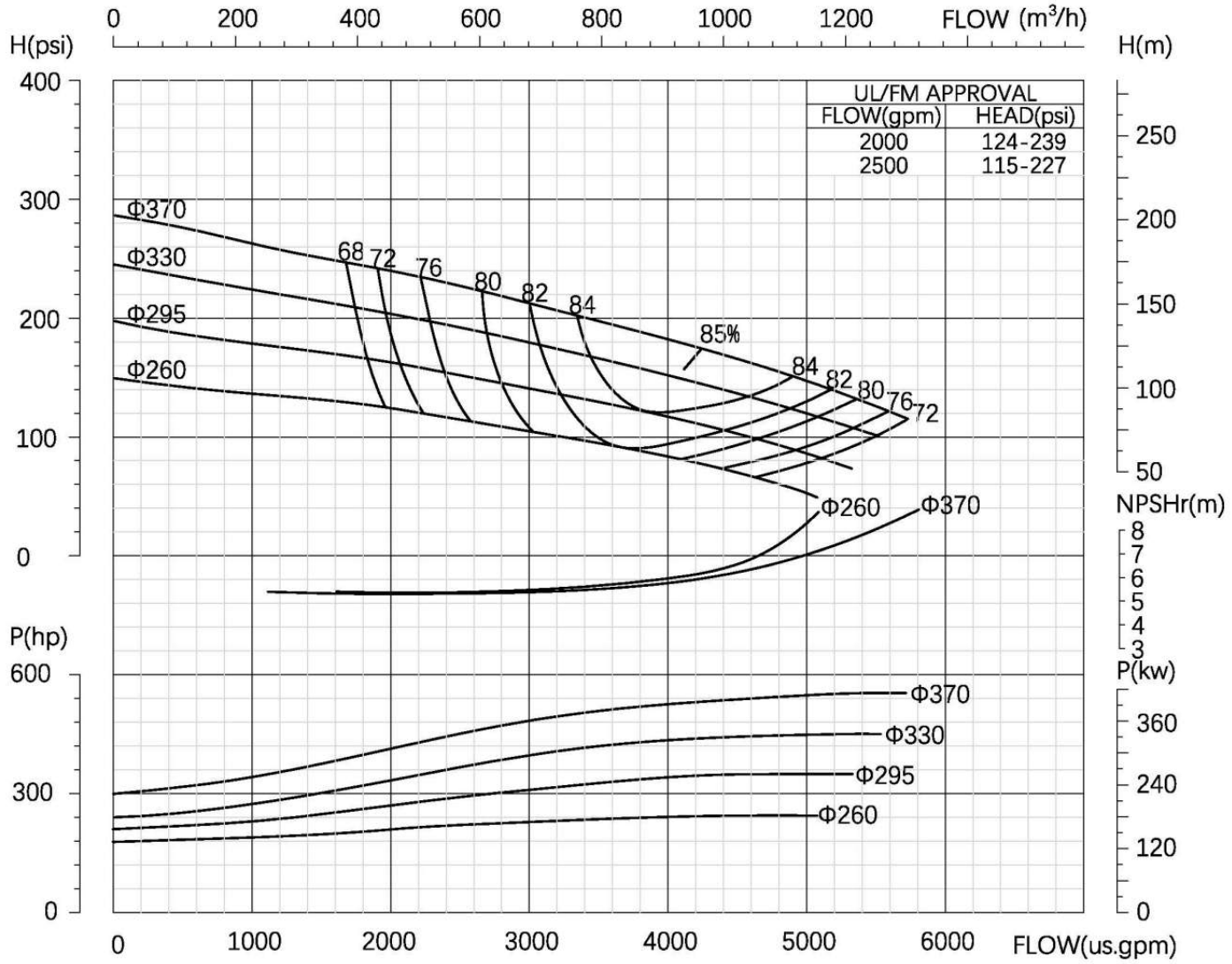

Flange rating(suction/discharge) : class 250，RF
Size : 10x8inch
Stages : 1
Frequency : 50Hz
Speed,rated : 2980rpm
Max working pressure,allowable : 362psi
Max suction pressure,allowable : 75psi
Max brake horse power : 245~554hp

Curve No.: CNPA205015@CNPA250-200-350@2980rpm@2000→2500usgpm

The contents of this publication must not be regarded as binding. EBARA ENGINEERING SINGAPORE PTE. LTD. reserves the right to effect any modification it deems necessary, without prior notice.

PERFORMANCE CURVES - CNPAx

CNPA250-200-600

UL LISTED FM APPROVED

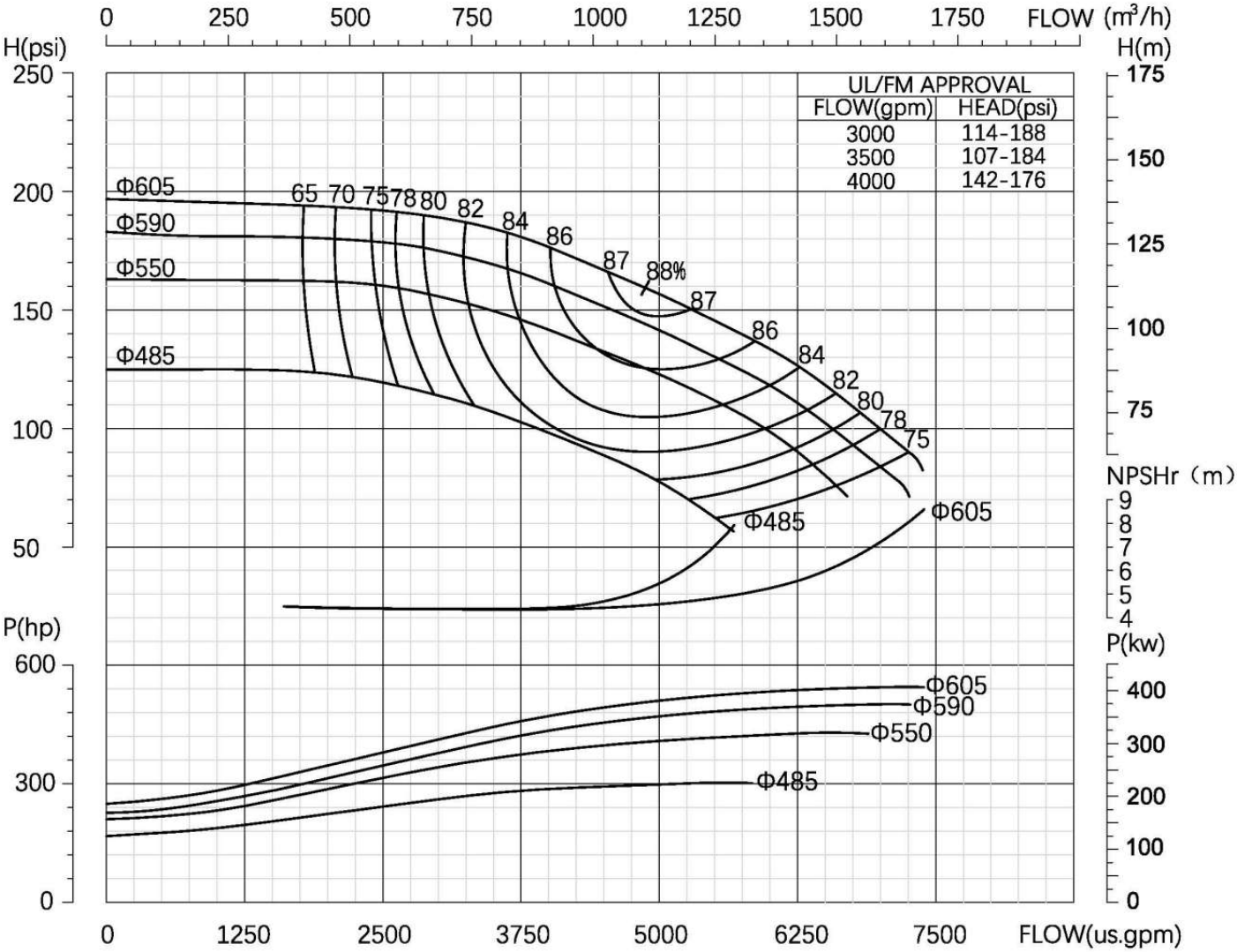

Flange rating(suction/discharge) : class 250，RF
Size : 10x8inch
Stages : 1
Frequency : 50Hz
Speed,rated :1480rpm
Max working pressure,allowable : 300psi
Max suction pressure,allowable : 75psi
Max brake horse power : 303-540hp

Curve No.: CNPA205016@CNPA250-200-600@1480rpm@3000→4000usgpm

The contents of this publication must not be regarded as binding. EBARA ENGINEERING SINGAPORE PTE. LTD. reserves the right to effect any modification it deems necessary, without prior notice.

PERFORMANCE CURVES - CNPAx

CNPA300-250-500

UL LISTED FM APPROVED

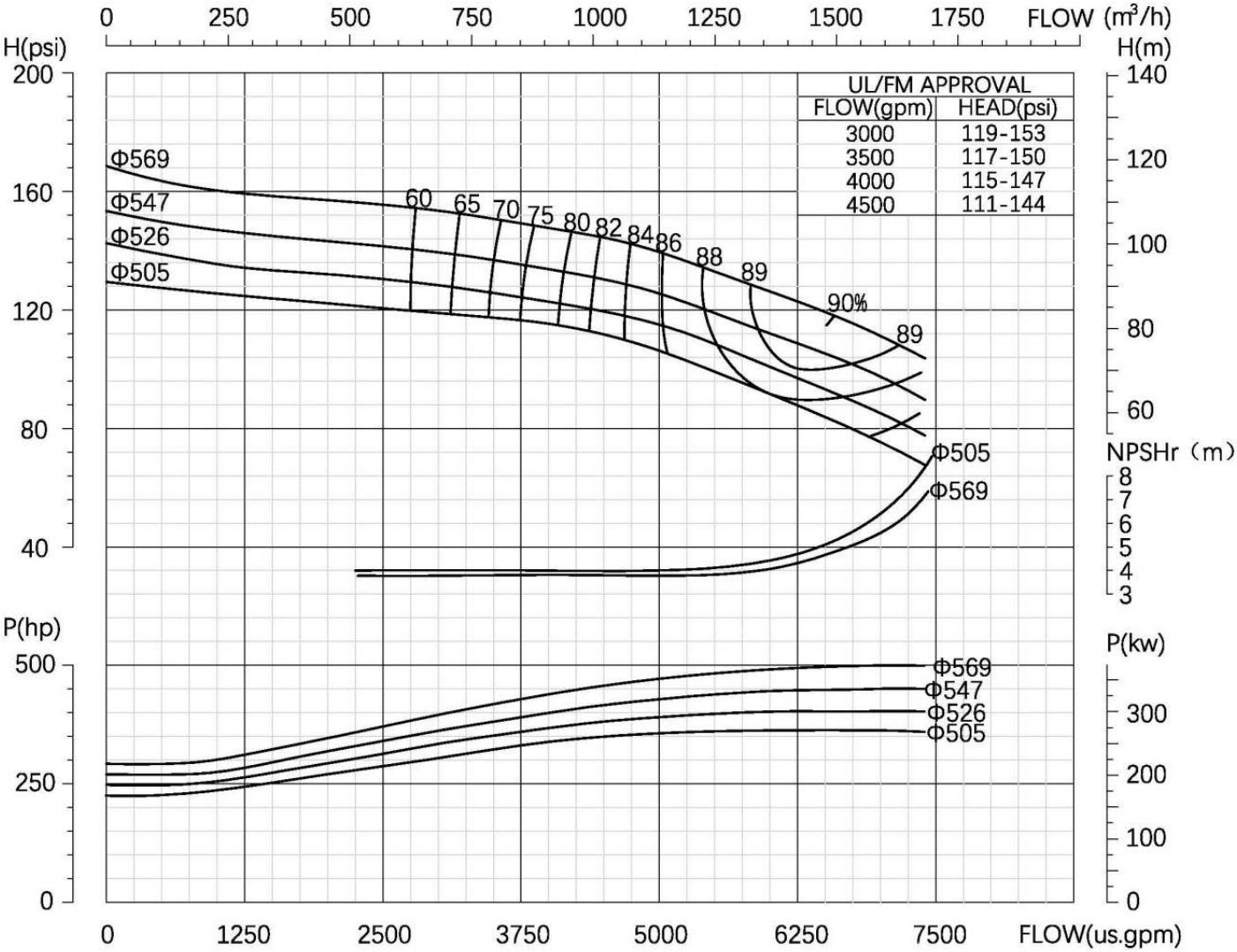

Flange rating(suction/discharge) : class 250，RF
Size : 12x10inch
Stages : 1
Frequency : 50Hz
Speed,rated : 1480rpm
Max working pressure,allowable : 330psi
Max suction pressure,allowable : 75psi
Max brake horse power : 362-500hp

Curve No.: CNPA205017@CNPA300-250-500@1480rpm@3000→4500usgpm

The contents of this publication must not be regarded as binding. EBARA ENGINEERING SINGAPORE PTE. LTD. reserves the right to effect any modification it deems necessary, without prior notice.

PERFORMANCE CURVES - CNPAx

CNPA300-250-600

UL LISTED FM APPROVED

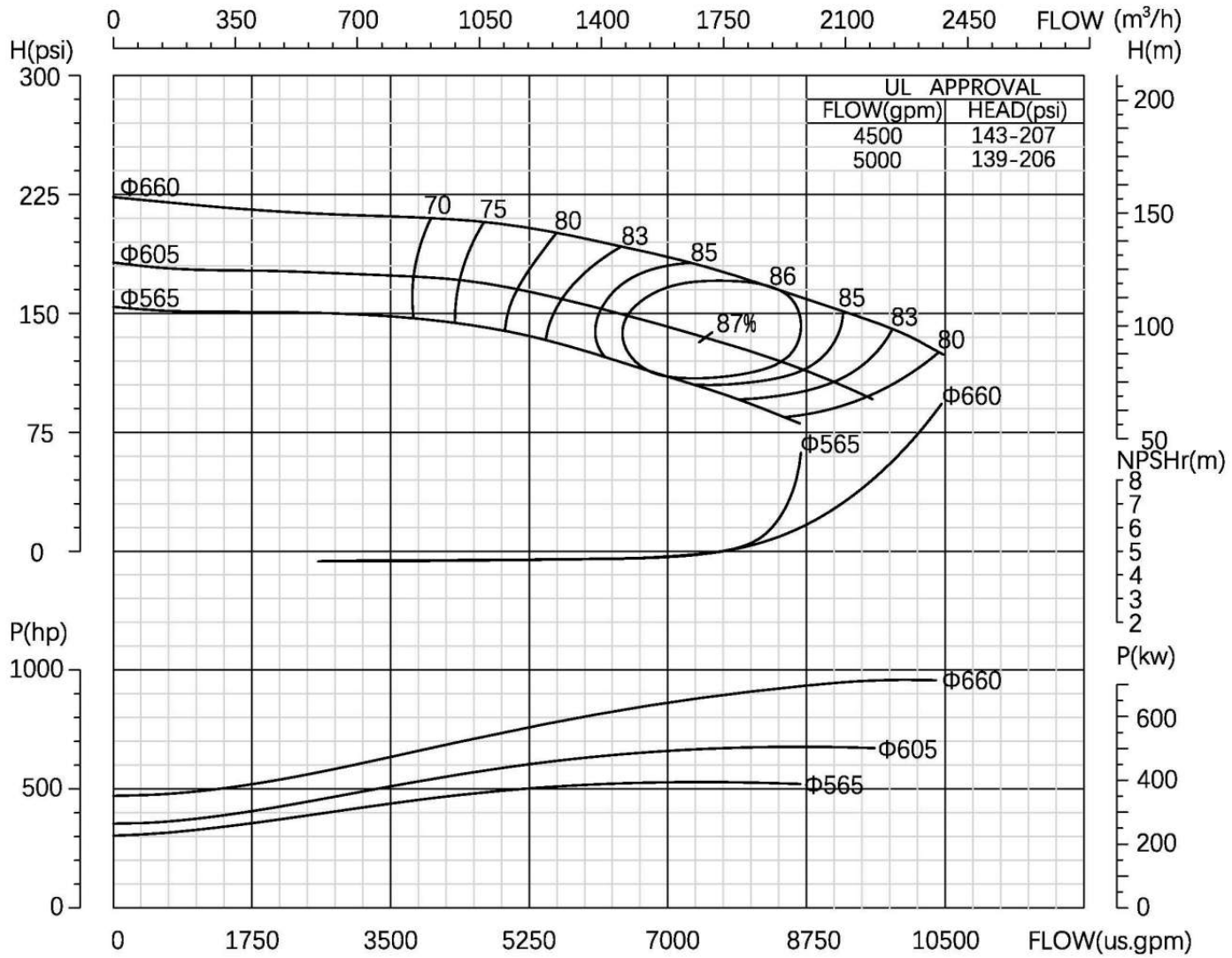

Flange rating(suction/discharge) : class 250，RF
Size : 12x10inch
Stages : 1
Frequency : 50Hz
Speed,rated : 1450rpm
Max working pressure,allowable : 310psi
Max suction pressure,allowable : 75psi
Max brake horse power : 525-957hp

Curve No.: CNPA205018@CNPA300-250-600@1450rpm@4500→5000usgpm

The contents of this publication must not be regarded as binding. EBARA ENGINEERING SINGAPORE PTE. LTD. reserves the right to effect any modification it deems necessary, without prior notice.

PERFORMANCE CURVES - CNPAx

CNPA300-250-640

UL LISTED FM APPROVED

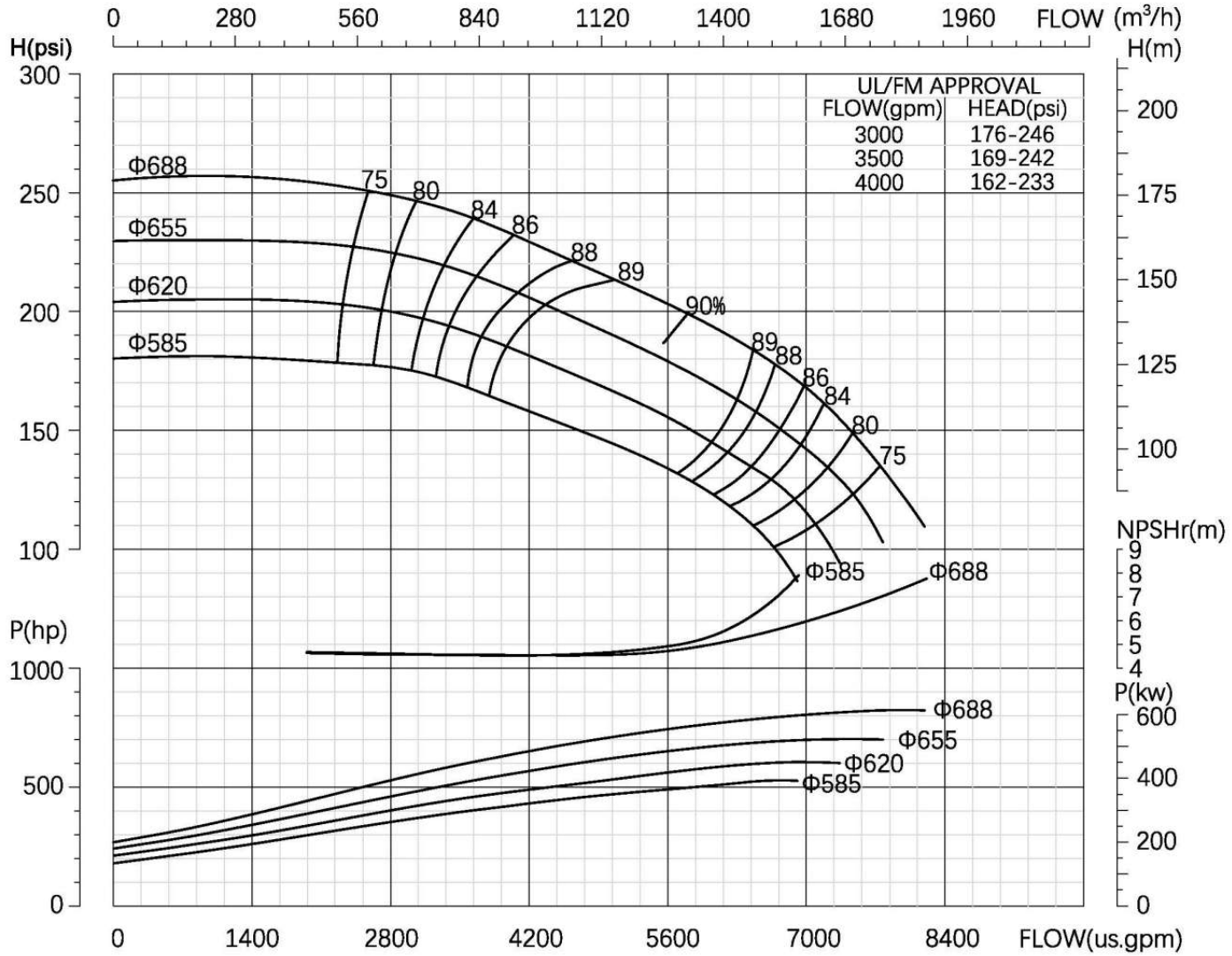

Flange rating(suction/discharge) :	class 250，RF
Size :	12x10inch
Stages :	1
Frequency :	50Hz
Speed,rated :	1480rpm
Max working pressure,allowable :	330psi
Max suction pressure,allowable :	75psi
Max brake horse power :	529-823hp

Curve No.: CNPA205019@CNPA300-250-640@1480rpm@3000→4000usgpm

The contents of this publication must not be regarded as binding. EBARA ENGINEERING SINGAPORE PTE. LTD. reserves the right to effect any modification it deems necessary, without prior notice.

PERFORMANCE CURVES - CNPAX

CNPA300-250-640G

UL LISTED FM APPROVED

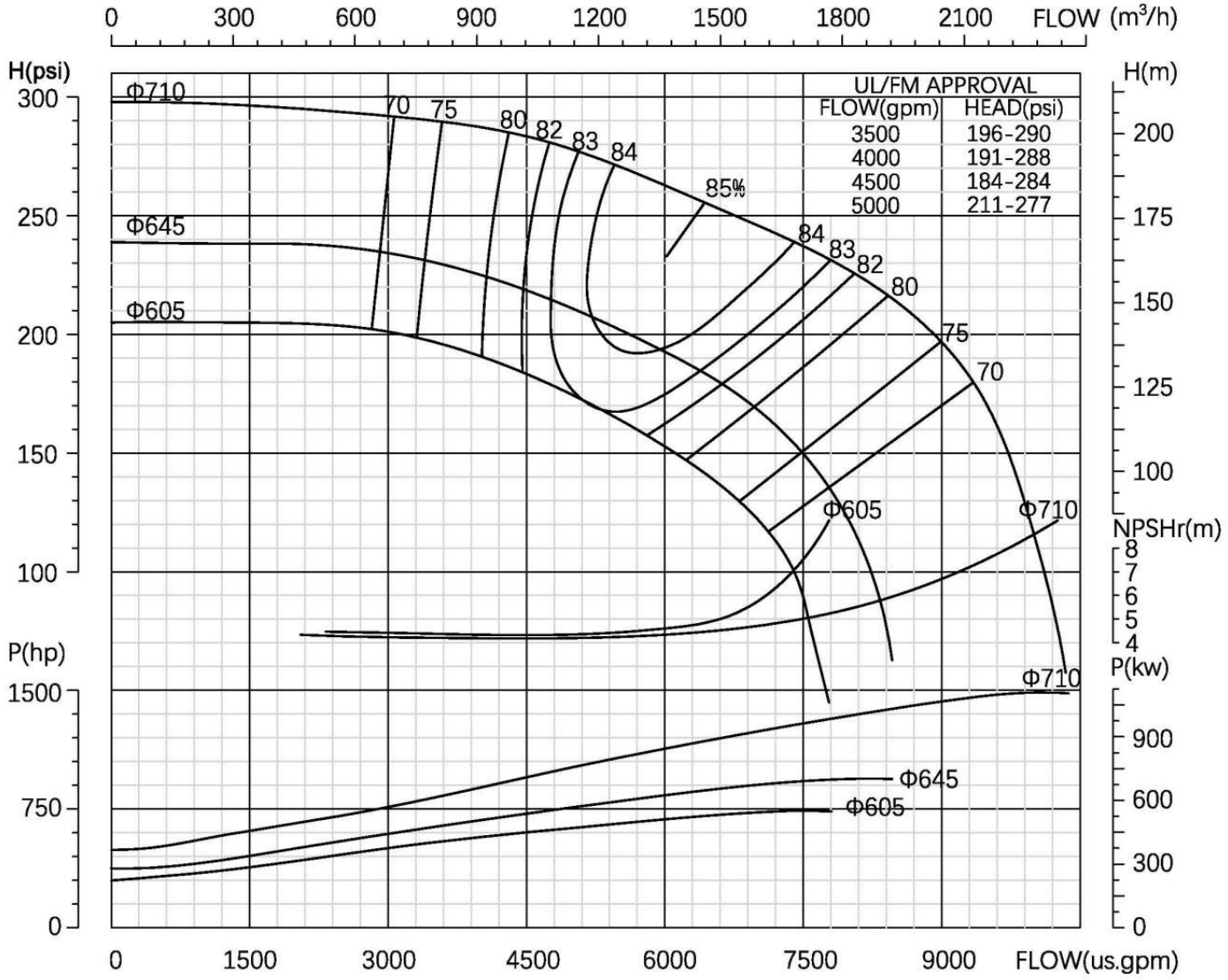

UL/FM APPROVAL	
FLOW(gpm)	HEAD(psi)
3500	196-290
4000	191-288
4500	184-284
5000	211-277

Flange rating(suction/discharge) : class 250，RF
Size : 12x10inch
Stages : 1
Frequency : 50Hz
Speed,rated :1480rpm
Max working pressure,allowable : 377psi
Max suction pressure,allowable : 75psi
Max brake horse power : 715-1324hp

Curve No.: CNPA205020@CNPA300-250-640G@1480rpm@3500→5000usgpm

The contents of this publication must not be regarded as binding. EBARA ENGINEERING SINGAPORE PTE. LTD. reserves the right to effect any modification it deems necessary, without prior notice.

PERFORMANCE CURVES - CNPAx

CNPA350-250-640

UL LISTED FM APPROVED

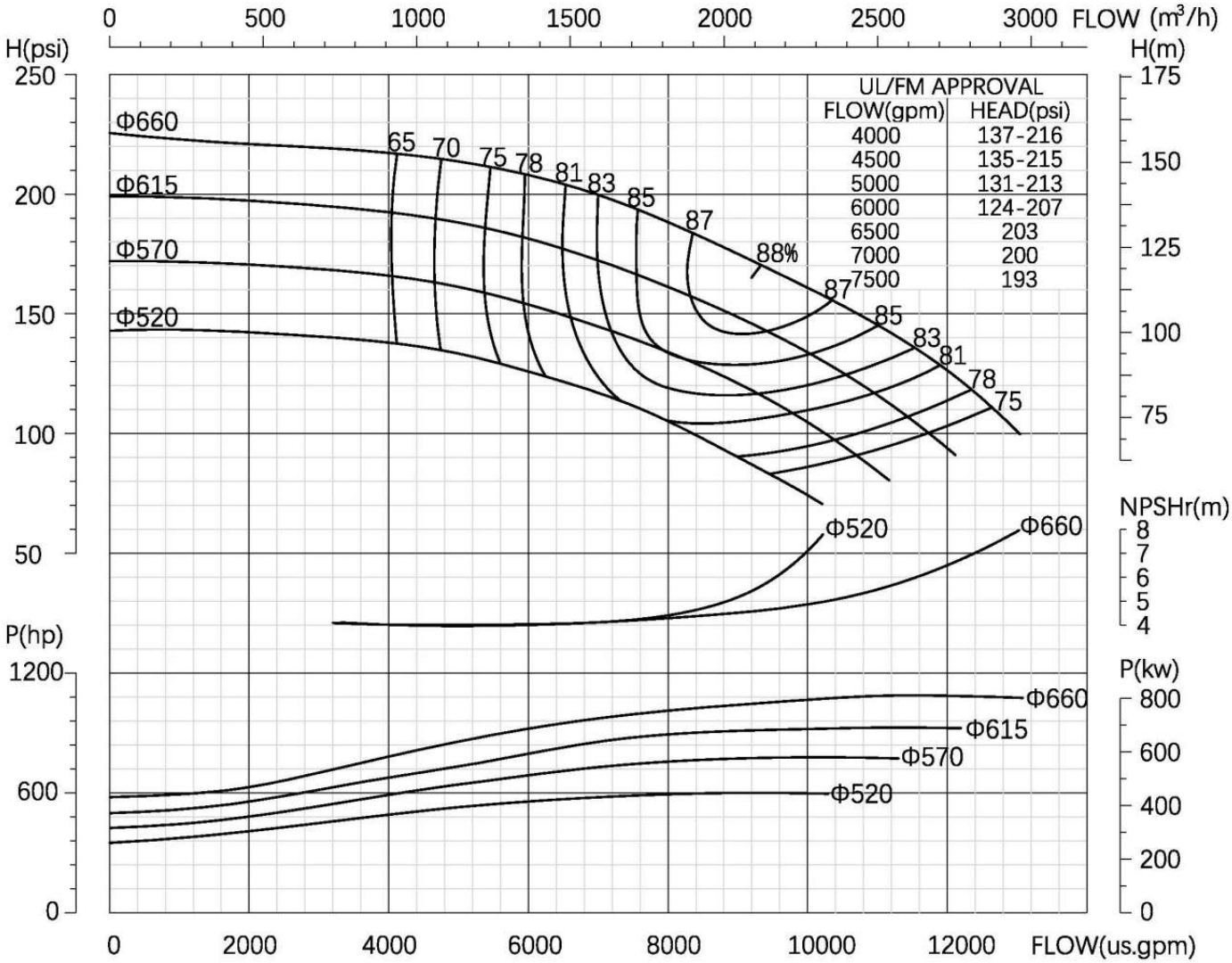

Flange rating(suction/discharge) : class 250，RF
Size : 14x10inch
Stages : 1
Frequency : 50Hz
Speed,rated : 1480rpm
Max working pressure,allowable : 300psi
Max suction pressure,allowable : 75psi
Max brake horse power : 599-1088hp

Curve No.: CNPA205021@CNPA350-250-640@1480rpm@4000→7500usgpm

The contents of this publication must not be regarded as binding. EBARA ENGINEERING SINGAPORE PTE. LTD. reserves the right to effect any modification it deems necessary, without prior notice.

PERFORMANCE CURVES - CNPAx

CNPA400-300-750

UL LISTED FM APPROVED

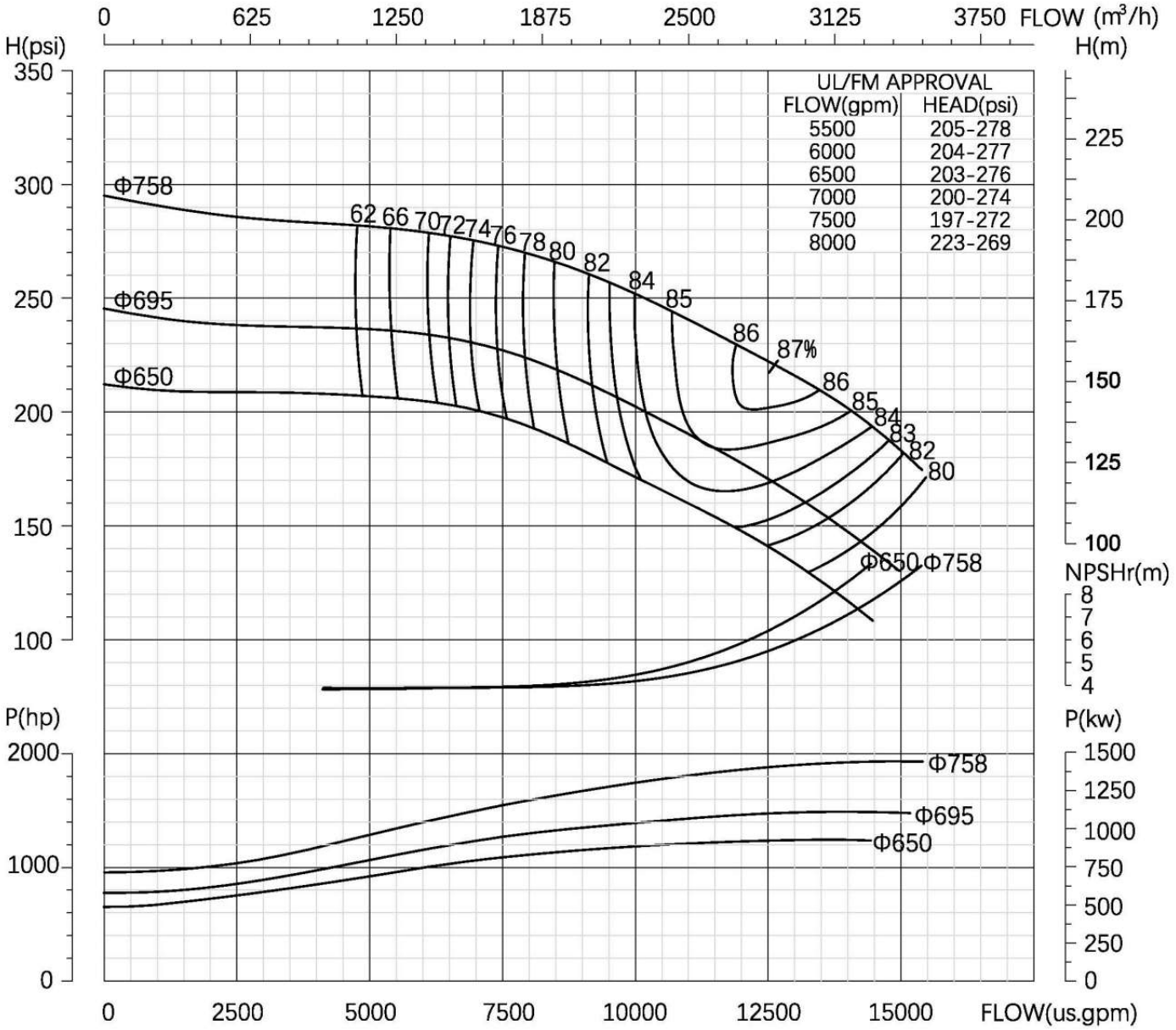

UL/FM APPROVAL

FLOW(gpm)	HEAD(psi)
5500	205-278
6000	204-277
6500	203-276
7000	200-274
7500	197-272
8000	223-269

Flange rating(suction/discharge) : class 250，RF
Size : 14x10inch
Stages : 1
Frequency : 50Hz
Speed,rated : 1480rpm
Max working pressure,allowable : 375psi
Max suction pressure,allowable : 75psi
Max brake horse power : 1245-1938hp

Curve No.: CNPA205022@CNPA400-300-750@1480rpm@5500→8000usgpm

The contents of this publication must not be regarded as binding. EBARA ENGINEERING SINGAPORE PTE. LTD. reserves the right to effect any modification it deems necessary, without prior notice.

PERFORMANCE CURVES - CNPAx

CNPA400-350-640

UL LISTED FM APPROVED

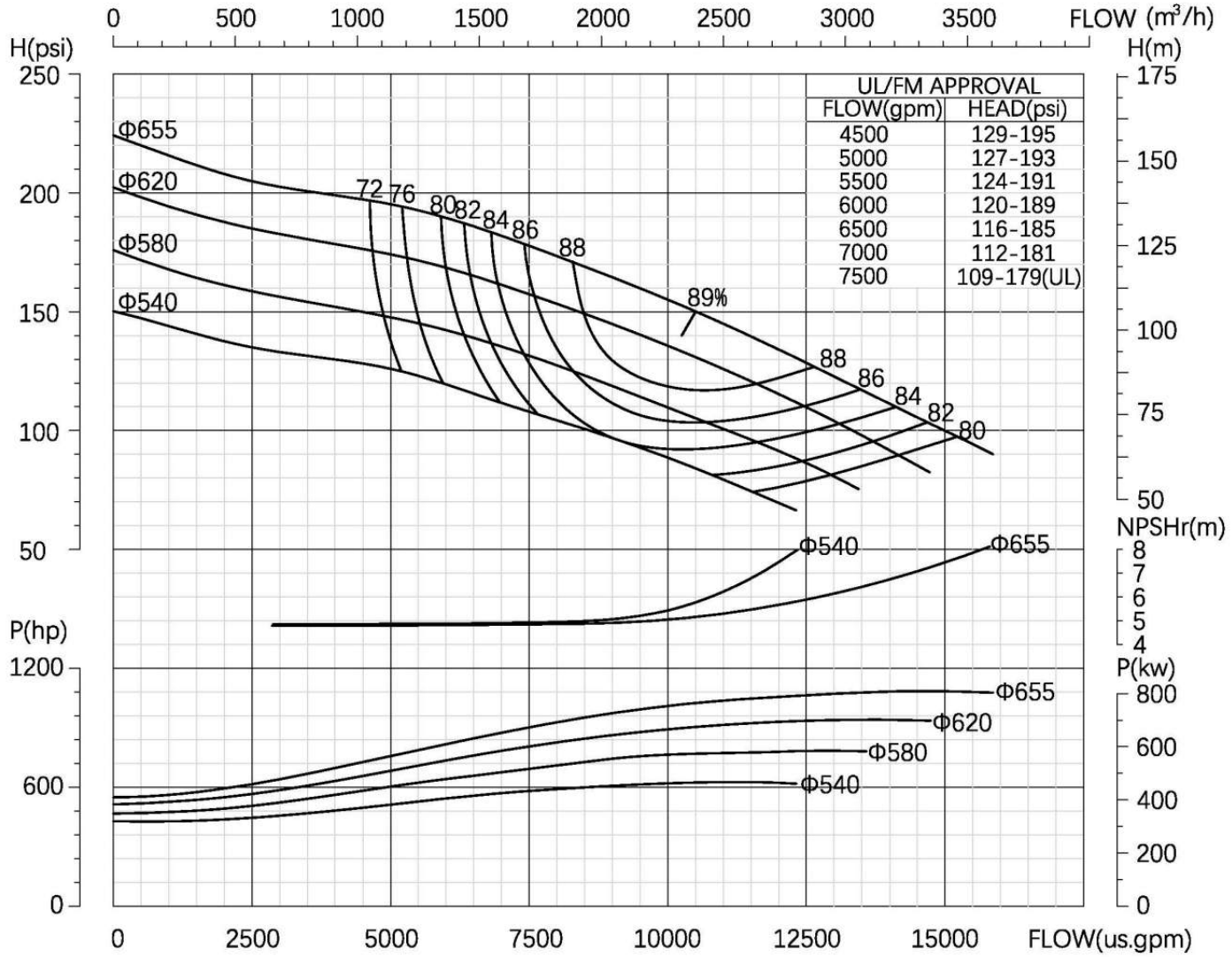

Flange rating(suction/discharge) : class 250，RF
Size : 16x14inch
Stages : 1
Frequency : 50Hz
Speed,rated :1480rpm
Max working pressure,allowable : 315psi
Max suction pressure,allowable : 75psi
Max brake horse power : 626-1083hp

Curve No.: CNPA205023@CNPA400-350-640@1480rpm@4500→7500usgpm

The contents of this publication must not be regarded as binding. EBARA ENGINEERING SINGAPORE PTE. LTD. reserves the right to effect any modification it deems necessary, without prior notice.

PERFORMANCE CURVES - CNPAx

CNPA400-350-640

UL LISTED FM APPROVED

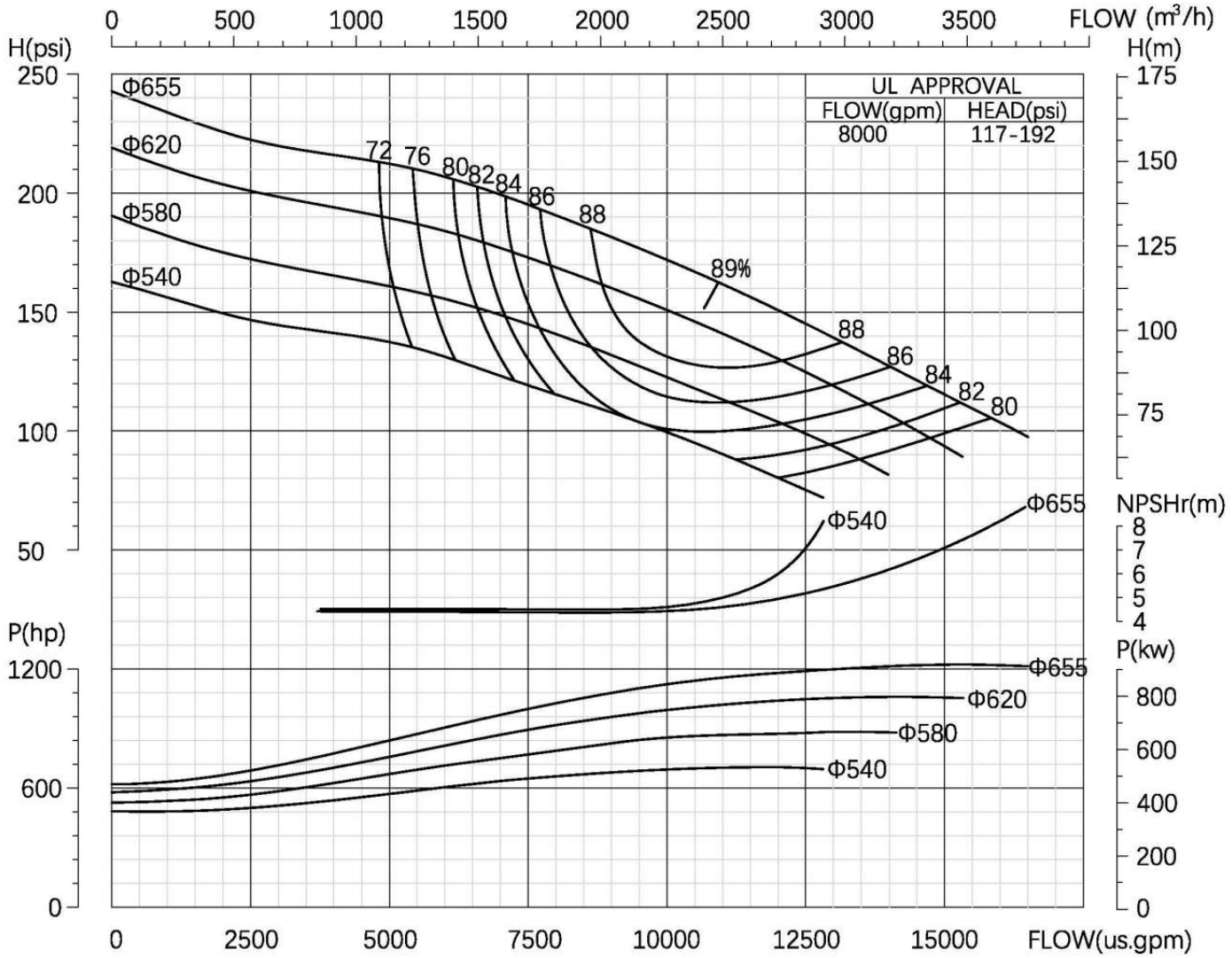

Flange rating(suction/discharge) : class 250，RF
Size : 16x14inch
Stages : 1
Frequency : 50Hz
Speed,rated : 1540rpm
Max working pressure,allowable : 315psi
Max suction pressure,allowable : 75psi
Max brake horse power : 704-1221hp

Curve No.: CNPA200020@CNPA400-350-640@1540rpm@8000usgpm

The contents of this publication must not be regarded as binding. EBARA ENGINEERING SINGAPORE PTE. LTD. reserves the right to effect any modification it deems necessary, without prior notice.

PERFORMANCE CURVES - CNPAX

CNPA100-80-200

UL LISTED FM APPROVED

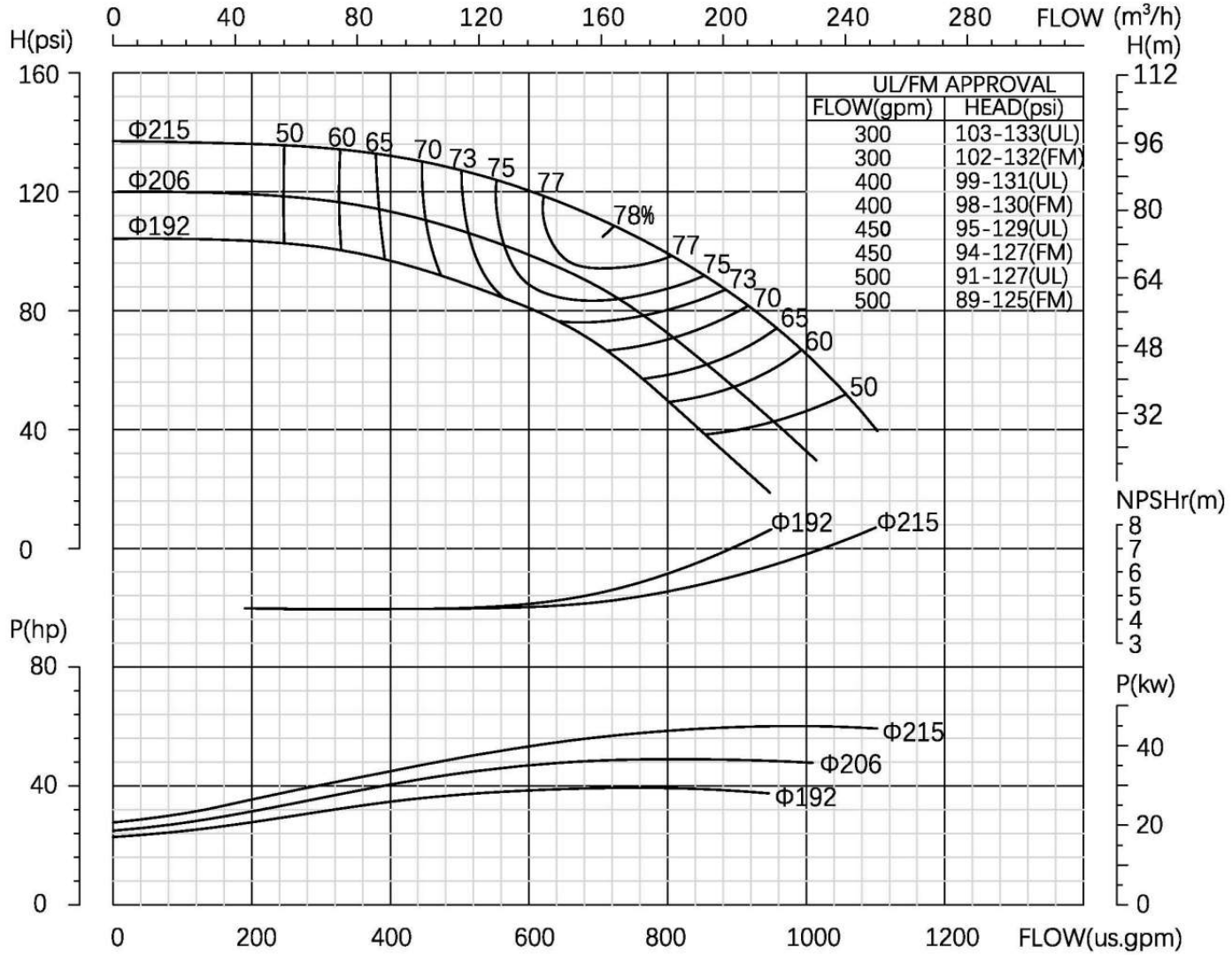

UL/FM APPROVAL	
FLOW(gpm)	HEAD(psi)
300	103-133(UL)
300	102-132(FM)
400	99-131(UL)
400	98-130(FM)
450	95-129(UL)
450	94-127(FM)
500	91-127(UL)
500	89-125(FM)

Flange rating(suction/discharge) : class 250，RF
Size : 4x3inch
Stages : 1
Frequency : 60Hz
Speed,rated : 3550rpm
Max working pressure,allowable : 220psi
Max suction pressure,allowable : 75psi
Max brake horse power : 39~59hp

Curve No.: CNPA236001@CNPA100-80-200@3550rpm@300→500usgpm

The contents of this publication must not be regarded as binding. EBARA ENGINEERING SINGAPORE PTE. LTD. reserves the right to effect any modification it deems necessary, without prior notice.

PERFORMANCE CURVES - CNPAX

CNPA100-80-250

UL LISTED FM APPROVED

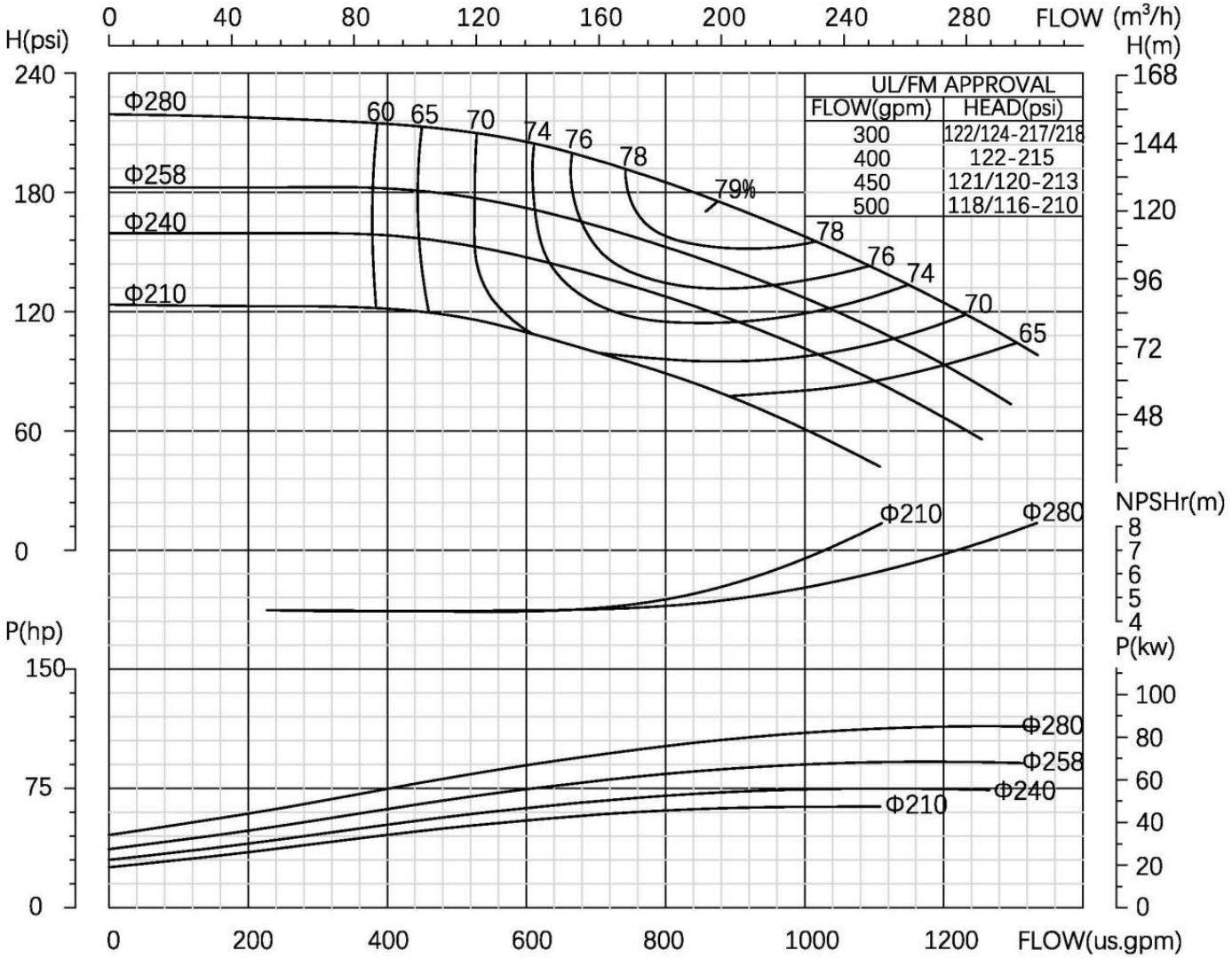

Flange rating(suction/discharge) : class 250，RF
Size : 4x3inch
Stages : 1
Frequency : 60Hz
Speed,rated : 3550rpm
Max working pressure,allowable : 305psi
Max suction pressure,allowable : 75psi
Max brake horse power : 63~114hp

Curve No.: CNPA236002@CNPA100-80-250@3550rpm@300→500usgpm

The contents of this publication must not be regarded as binding. EBARA ENGINEERING SINGAPORE PTE. LTD. reserves the right to effect any modification it deems necessary, without prior notice.

PERFORMANCE CURVES - CNPAX

CNPA125-80-200

UL LISTED FM APPROVED

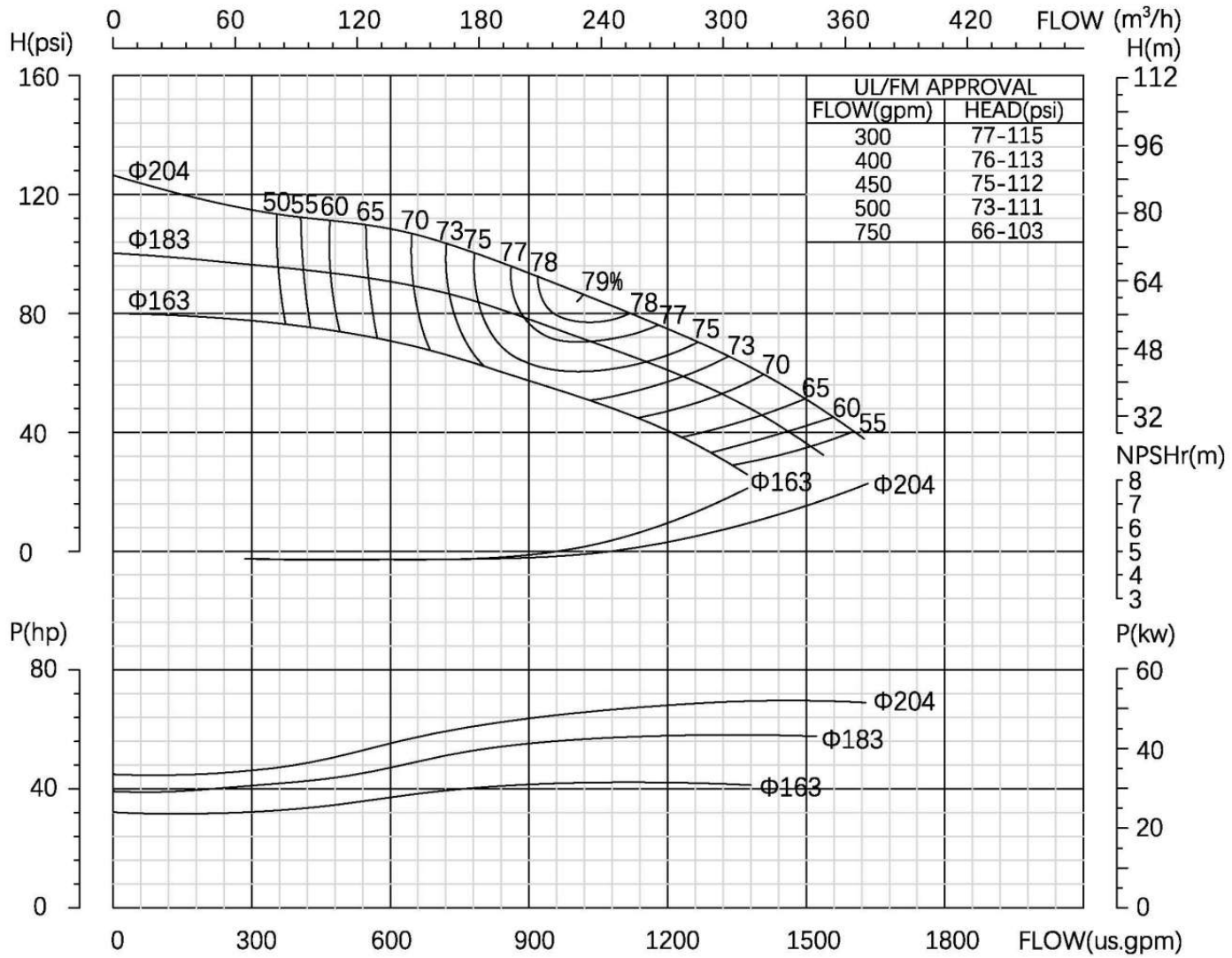

Flange rating(suction/discharge) : class 250，RF
Size : 5x3inch
Stages : 1
Frequency : 60Hz
Speed,rated : 3550rpm
Max working pressure,allowable : 200psi
Max suction pressure,allowable : 75psi
Max brake horse power : 42~70hp

Curve No.: CNPA206001@CNPA125-80-200@3550rpm@300→750usgpm

The contents of this publication must not be regarded as binding. EBARA ENGINEERING SINGAPORE PTE. LTD. reserves the right to effect any modification it deems necessary, without prior notice.

PERFORMANCE CURVES - CNPAx

CNPA125-80-250

UL LISTED FM APPROVED

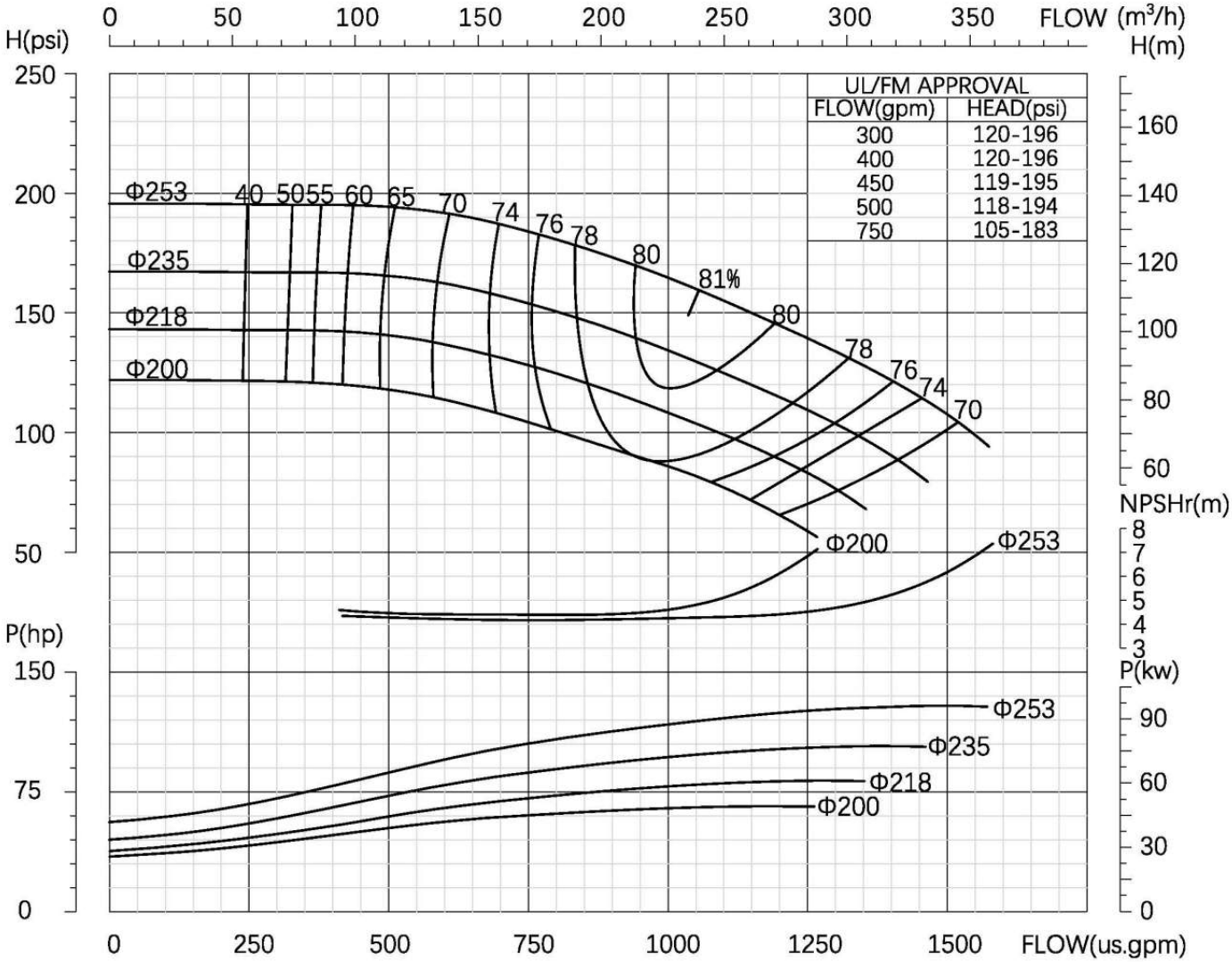

Flange rating(suction/discharge) : class 250，RF
Size : 5x3inch
Stages : 1
Frequency : 60Hz
Speed,rated : 3550rpm
Max working pressure,allowable : 280psi
Max suction pressure,allowable : 75psi
Max brake horse power : 63~125hp

Curve No.: CNPA206002@CNPA125-80-250@3550rpm@300→750usgpm

The contents of this publication must not be regarded as binding. EBARA ENGINEERING SINGAPORE PTE. LTD. reserves the right to effect any modification it deems necessary, without prior notice.

PERFORMANCE CURVES - CNPAx

CNPA125-80-350

UL LISTED FM APPROVED

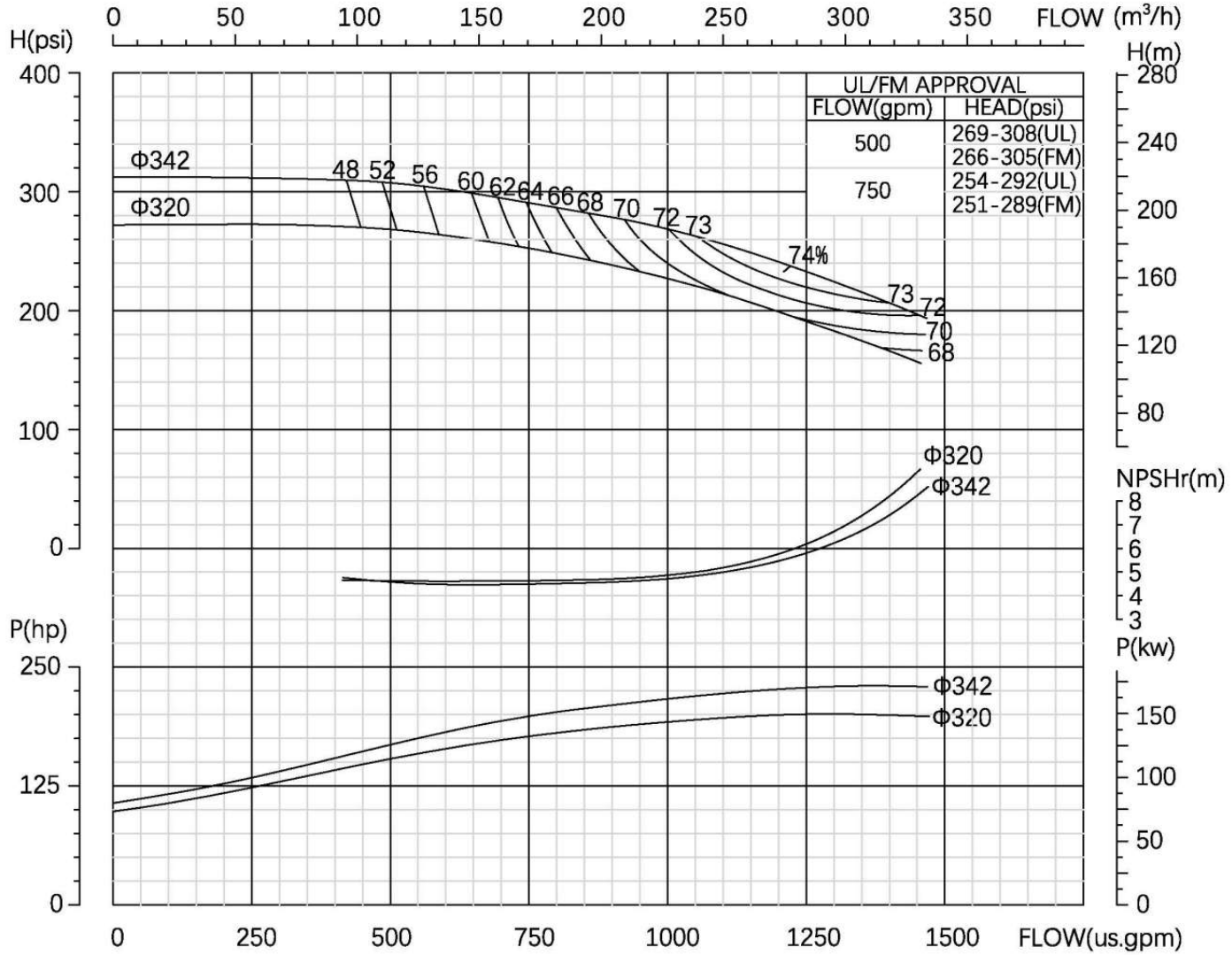

Flange rating(suction/discharge)	: class 250，RF
Size	: 5x3inch
Stages	: 1
Frequency	: 60Hz
Speed,rated	: 3550rpm
Max working pressure,allowable	: 380psi
Max suction pressure,allowable	: 75psi
Max brake horse power	: 200~230hp

Curve No.: CNPA206003@CNPA125-80-350@3550rpm@500→750usgpm

The contents of this publication must not be regarded as binding. EBARA ENGINEERING SINGAPORE PTE. LTD. reserves the right to effect any modification it deems necessary, without prior notice.

PERFORMANCE CURVES - CNPAX

CNPA125-100-300

UL LISTED FM APPROVED

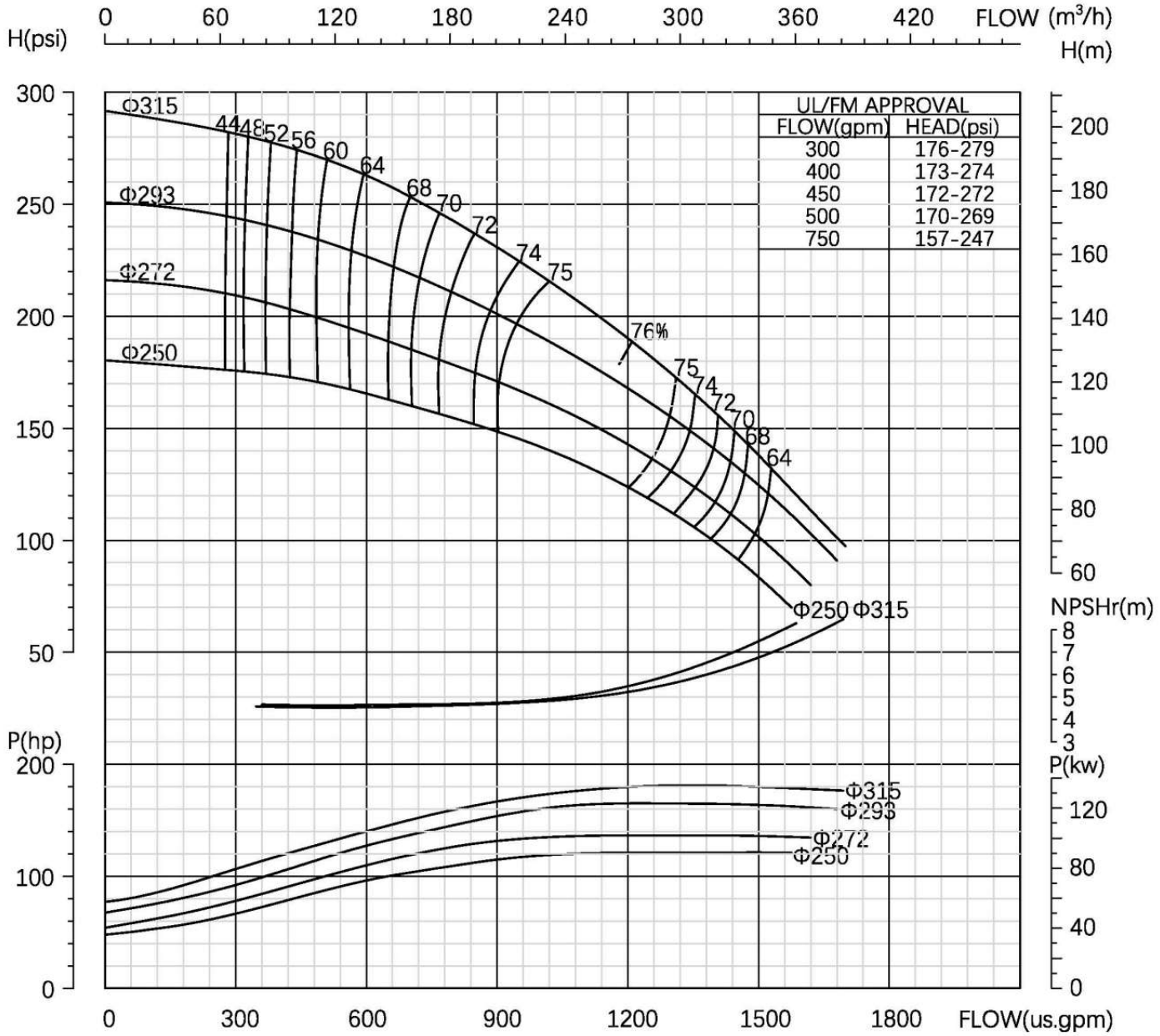

UL/FM APPROVAL	
FLOW(gpm)	HEAD(psi)
300	176-279
400	173-274
450	172-272
500	170-269
750	157-247

Flange rating(suction/discharge) : class 250，RF
Size : 5x4inch
Stages : 1
Frequency : 60Hz
Speed,rated : 3550rpm
Max working pressure,allowable : 400psi
Max suction pressure,allowable : 75psi
Max brake horse power : 122~181hp

Curve No.: CNPA236004@CNPA125-100-300@3550rpm@300→750usgpm

The contents of this publication must not be regarded as binding. EBARA ENGINEERING SINGAPORE PTE. LTD. reserves the right to effect any modification it deems necessary, without prior notice.

PERFORMANCE CURVES - CNPAx

CNPA150-125-200

UL LISTED FM APPROVED

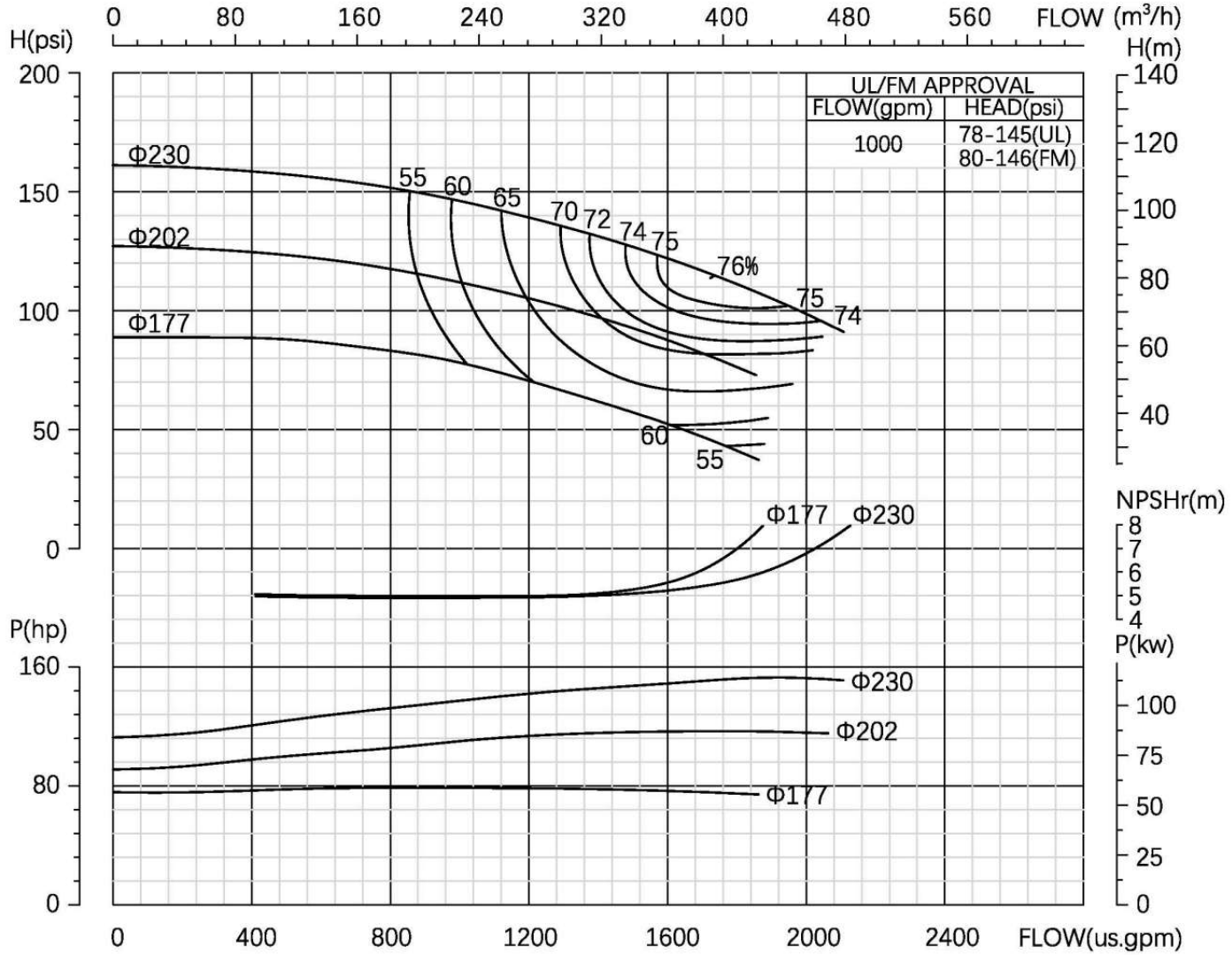

Flange rating(suction/discharge) : class 250，RF
Size : 6x5inch
Stages : 1
Frequency : 60Hz
Speed,rated : 3550rpm
Max working pressure,allowable : 246psi
Max suction pressure,allowable : 75psi
Max brake horse power : 79~153hp

Curve No.: CNPA206006@CNPA150-125-200@3550rpm@1000usgpm

The contents of this publication must not be regarded as binding. EBARA ENGINEERING SINGAPORE PTE. LTD. reserves the right to effect any modification it deems necessary, without prior notice.

PERFORMANCE CURVES - CNPAx

CNPA150-125-250

UL LISTED FM APPROVED

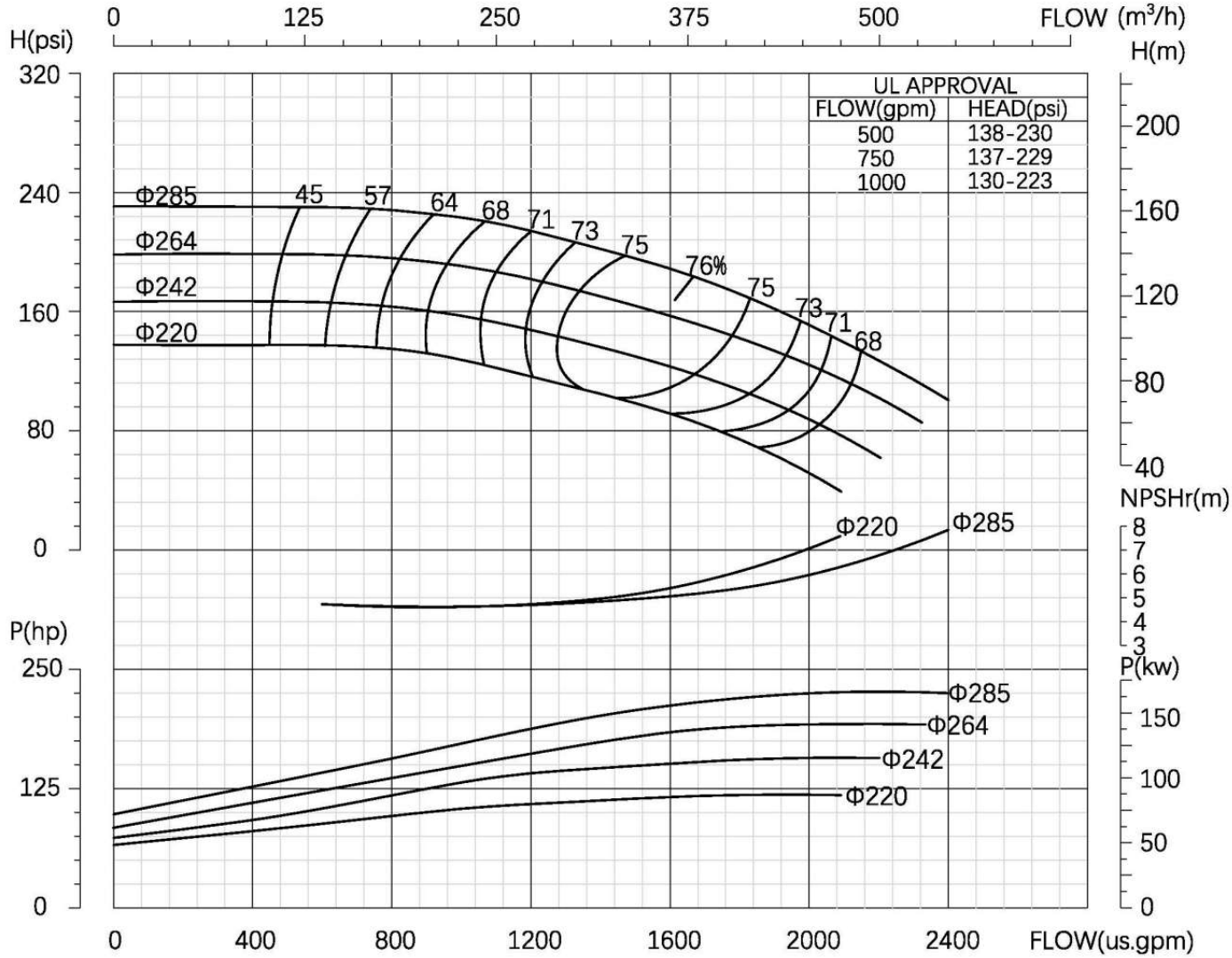

Flange rating(suction/discharge) : class 250，RF
Size : 6x5inch
Stages : 1
Frequency : 60Hz
Speed,rated : 3550rpm
Max working pressure,allowable : 310psi
Max suction pressure,allowable : 75psi
Max brake horse power : 118~227hp

Curve No.: CNPA206006@CNPA150-125-250@3550rpm@500→1000usgpm

The contents of this publication must not be regarded as binding. EBARA ENGINEERING SINGAPORE PTE. LTD. reserves the right to effect any modification it deems necessary, without prior notice.

PERFORMANCE CURVES - CNPAx

CNPA150-125-310

UL LISTED FM APPROVED

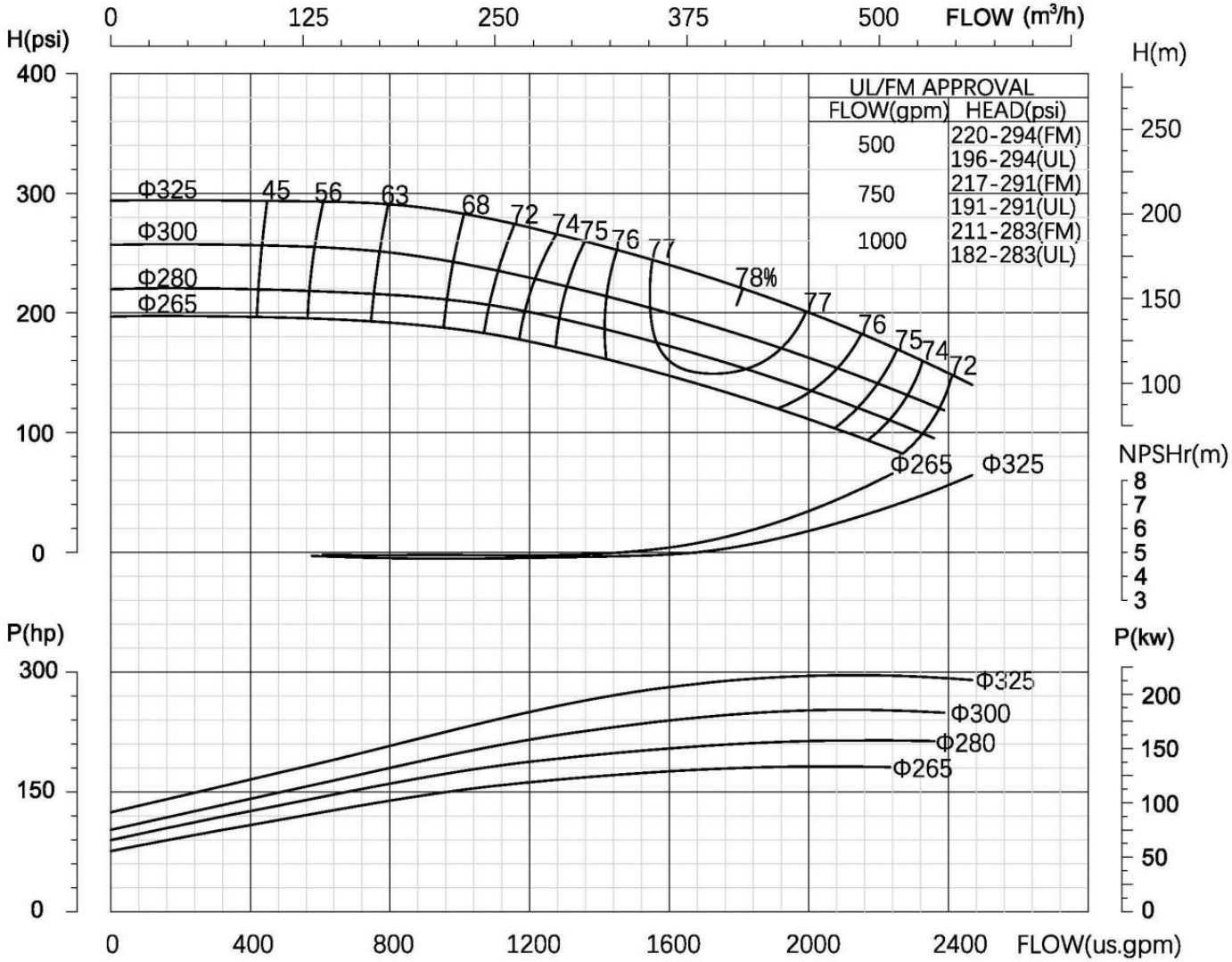

Flange rating(suction/discharge) : class 250，RF
Size : 6x5inch
Stages : 1
Frequency : 60Hz
Speed,rated : 3550rpm
Max working pressure,allowable : 370psi
Max suction pressure,allowable : 75psi
Max brake horse power : 182~296hp

Curve No.: CNPA206007@CNPA150-125-310@3550rpm@500→1000usgpm

The contents of this publication must not be regarded as binding. EBARA ENGINEERING SINGAPORE PTE. LTD. reserves the right to effect any modification it deems necessary, without prior notice.

PERFORMANCE CURVES - CNPAx

CNPA200-150-250

UL LISTED FM APPROVED

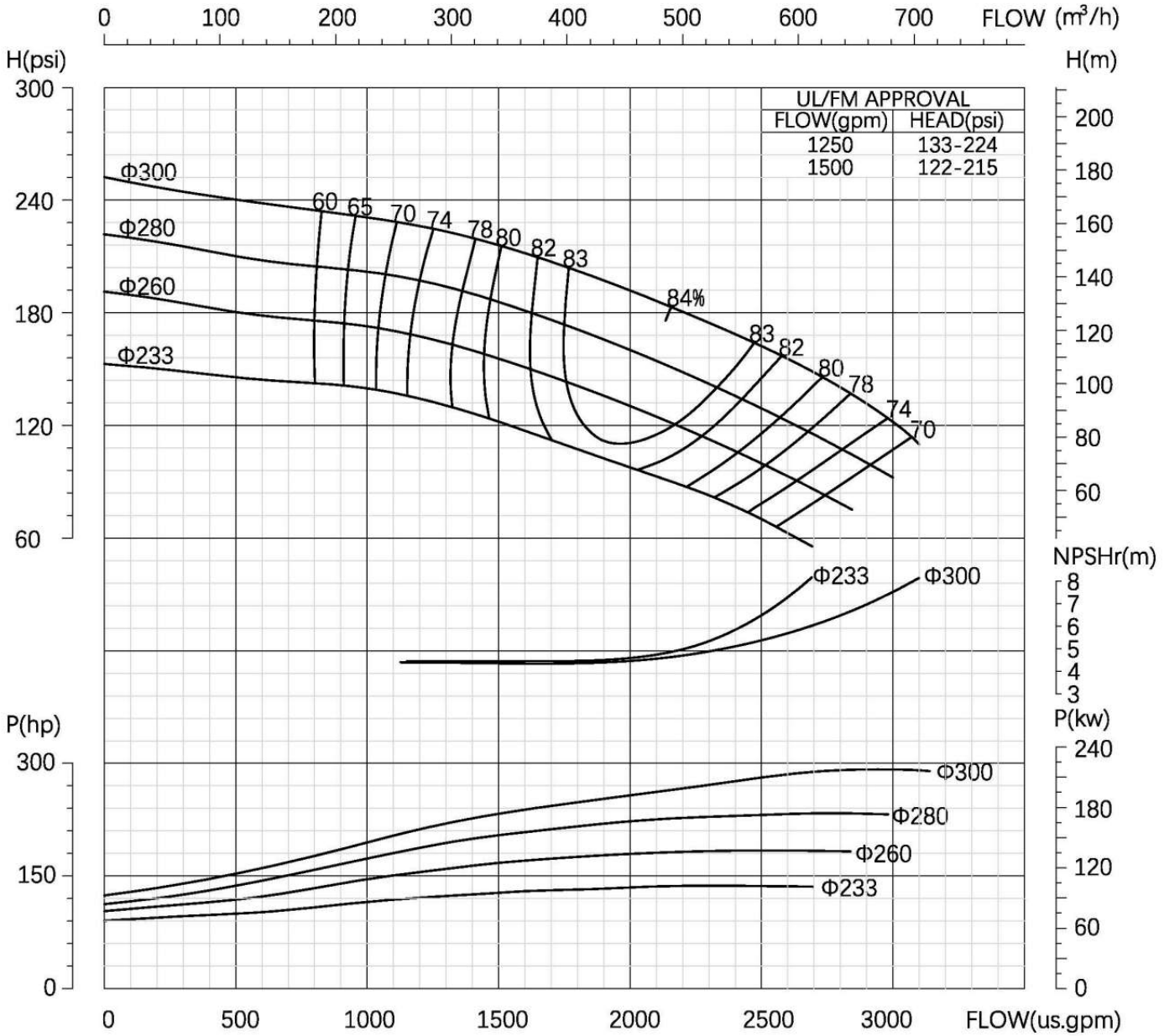

Flange rating(suction/discharge) : class 250，RF
Size : 8x6inch
Stages : 1
Frequency : 60Hz
Speed,rated : 3550rpm
Max working pressure,allowable : 330psi
Max suction pressure,allowable : 75psi
Max brake horse power : 138-292hp

Curve No.: CNPA206008@CNPA200-150-250@3550rpm@1250→1500usgpm

The contents of this publication must not be regarded as binding. EBARA ENGINEERING SINGAPORE PTE. LTD. reserves the right to effect any modification it deems necessary, without prior notice.

PERFORMANCE CURVES - CNPAx

CNPA200-150-310

UL LISTED FM APPROVED

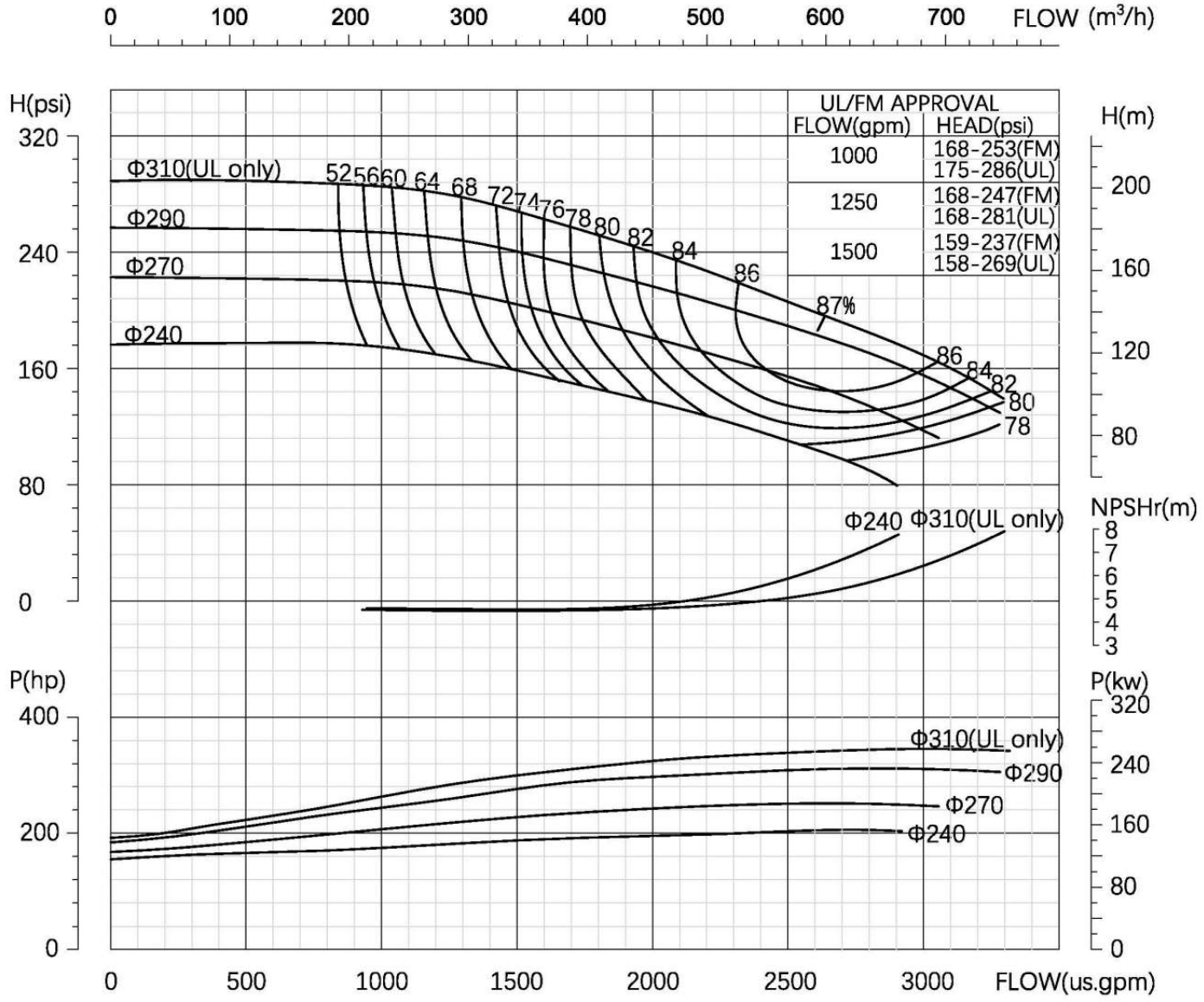

Flange rating(suction/discharge) : class 250，RF
Size : 8x6inch
Stages : 1
Frequency : 60Hz
Speed,rated : 3550rpm
Max working pressure,allowable : 370psi
Max suction pressure,allowable : 75psi
Max brake horse power : 203~342hp

Curve No.: CNPA206009@CNPA200-150-310@3550rpm@1000→1500usgpm

The contents of this publication must not be regarded as binding. EBARA ENGINEERING SINGAPORE PTE. LTD. reserves the right to effect any modification it deems necessary, without prior notice.

PERFORMANCE CURVES - CNPAx

CNPA200-150-330

UL LISTED FM APPROVED

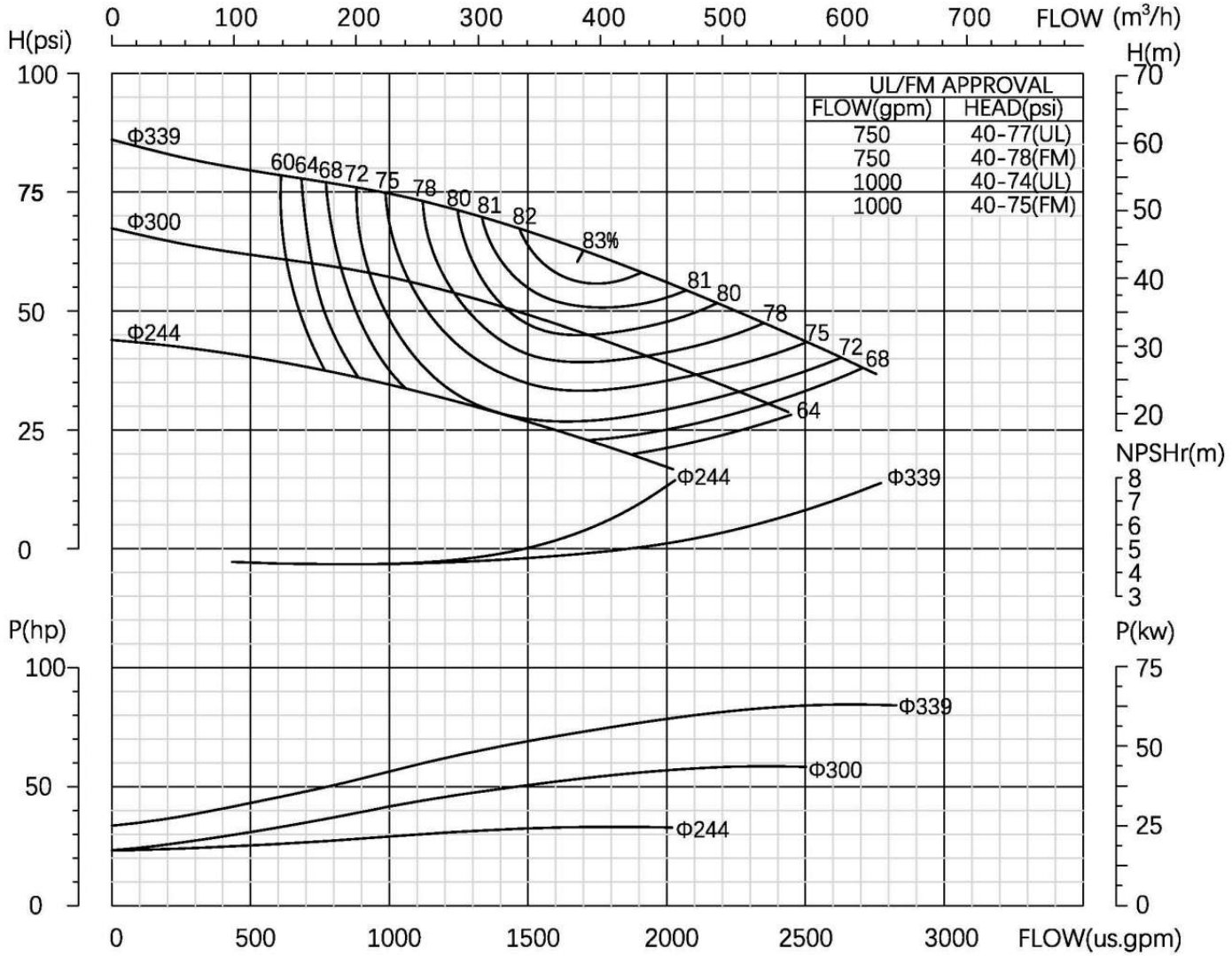

Flange rating(suction/discharge) : class 250，RF
Size : 8x6inch
Stages : 1
Frequency : 60Hz
Speed,rated : 1760rpm
Max working pressure,allowable : 310psi
Max suction pressure,allowable : 75psi
Max brake horse power : 33~84hp

Curve No.: CNPA236010@CNPA200-150-330@1760rpm@750→1000usgpm

The contents of this publication must not be regarded as binding. EBARA ENGINEERING SINGAPORE PTE. LTD. reserves the right to effect any modification it deems necessary, without prior notice.

PERFORMANCE CURVES - CNPAx

CNPA200-150-350

UL LISTED FM APPROVED

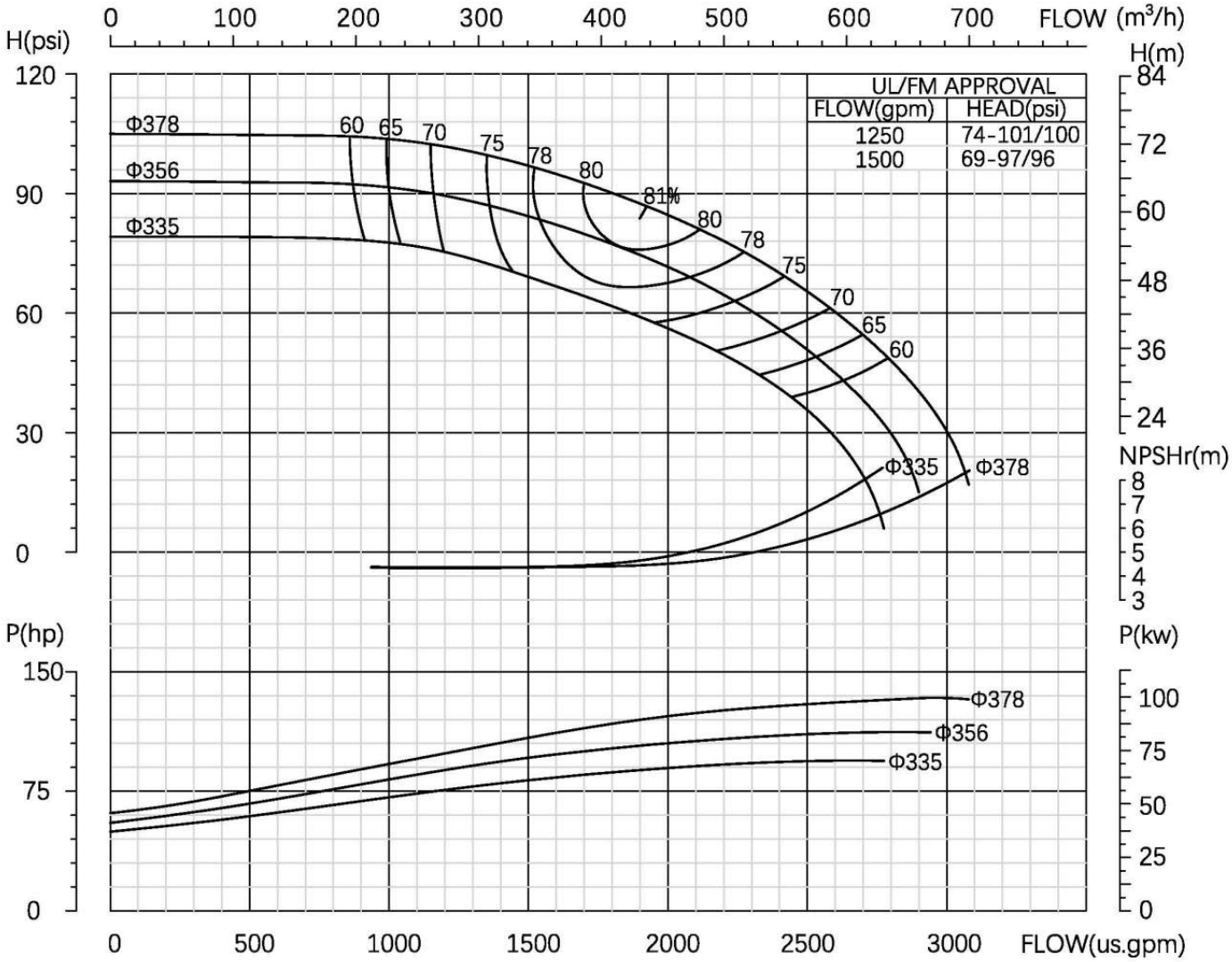

Flange rating(suction/discharge) : class 250，RF
Size : 8x6inch
Stages : 1
Frequency : 60Hz
Speed,rated : 1760rpm
Max working pressure,allowable : 220psi
Max suction pressure,allowable : 75psi
Max brake horse power : 94~133hp

Curve No.: CNPA236011@CNPA200-150-350@1760rpm@1250→1500usgpm

The contents of this publication must not be regarded as binding. EBARA ENGINEERING SINGAPORE PTE. LTD. reserves the right to effect any modification it deems necessary, without prior notice.

PERFORMANCE CURVES - CNPAx

CNPA200-150-375

UL LISTED FM APPROVED

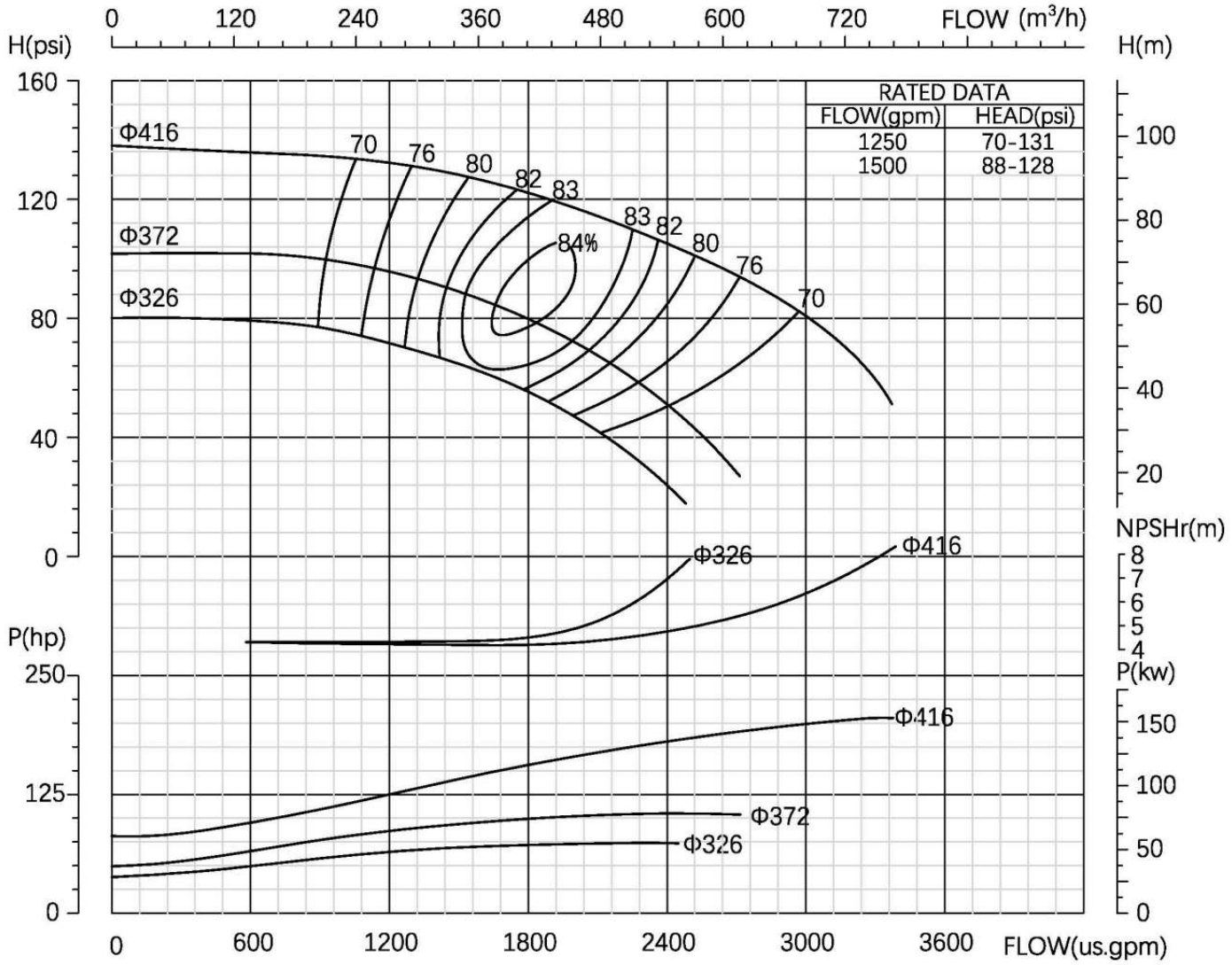

Flange rating(suction/discharge) : class 250，RF
Size : 8x6inch
Stages : 1
Frequency : 60Hz
Speed,rated : 1760rpm
Max working pressure,allowable : 270psi
Max suction pressure,allowable : 75psi
Max brake horse power : 74~205hp

Curve No.: CNPA206011@CNPA200-150-375@1760rpm@1250→1500usgpm

The contents of this publication must not be regarded as binding. EBARA ENGINEERING SINGAPORE PTE. LTD. reserves the right to effect any modification it deems necessary, without prior notice.

PERFORMANCE CURVES - CNPAX

CNPA200-150-400

UL LISTED FM APPROVED

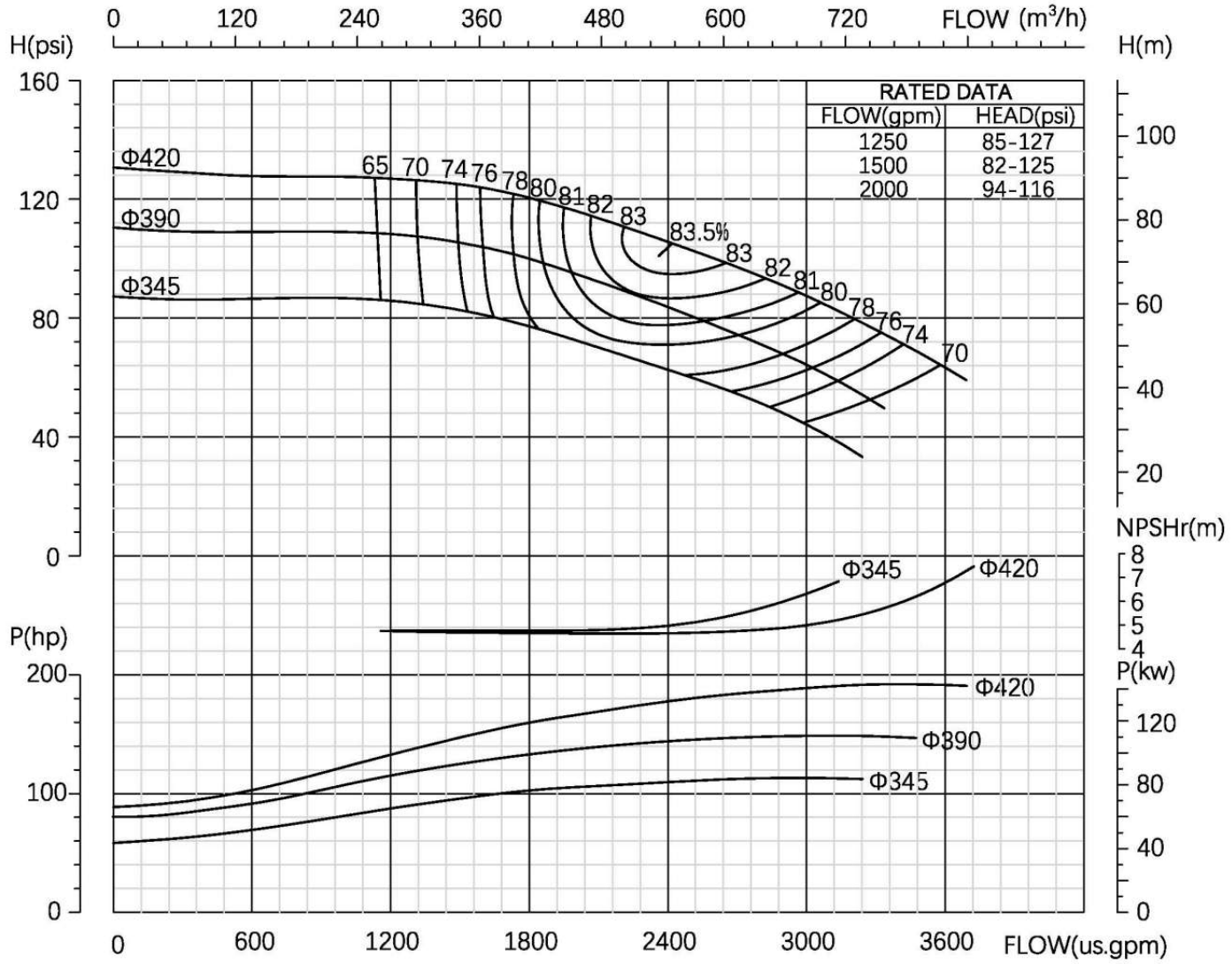

Flange rating(suction/discharge) : class 250，RF
Size : 8x6inch
Stages : 1
Frequency : 60Hz
Speed,rated : 1760rpm
Max working pressure,allowable : 270psi
Max suction pressure,allowable : 75psi
Max brake horse power : 113~191hp

Curve No.: CNPA206012@CNPA200-150-400@1760rpm@1250→2000usgpm

The contents of this publication must not be regarded as binding. EBARA ENGINEERING SINGAPORE PTE. LTD. reserves the right to effect any modification it deems necessary, without prior notice.

PERFORMANCE CURVES - CNPAx

CNPA200-150-400G

UL LISTED FM APPROVED

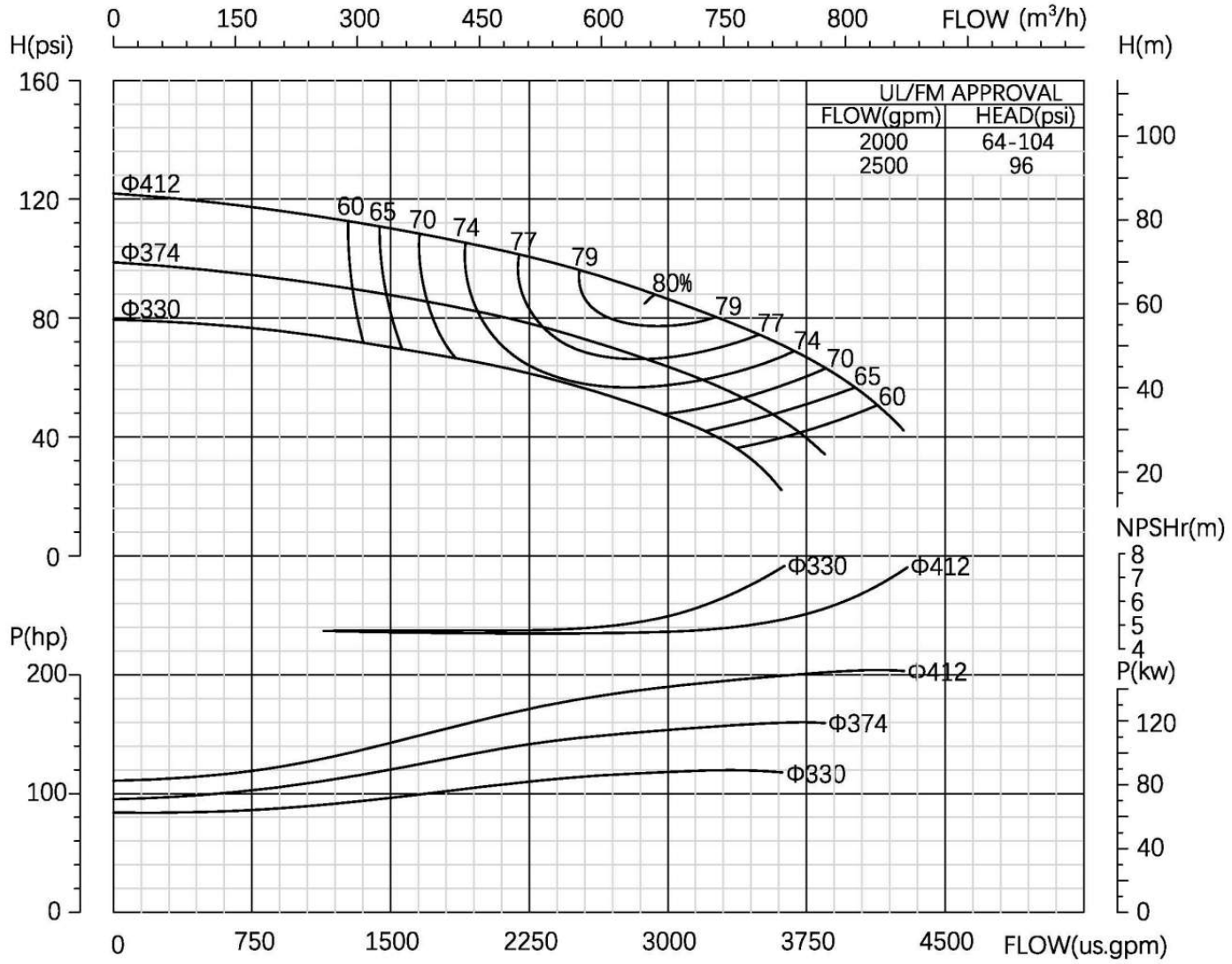

Flange rating(suction/discharge) : class 250，RF
Size : 8x6inch
Stages : 1
Frequency : 60Hz
Speed,rated : 1760rpm
Max working pressure,allowable : 232psi
Max suction pressure,allowable : 75psi
Max brake horse power : 119~204hp

Curve No.: CNPA236012@CNPA200-150-400G@1760rpm@2000→2500usgpm

The contents of this publication must not be regarded as binding. EBARA ENGINEERING SINGAPORE PTE. LTD. reserves the right to effect any modification it deems necessary, without prior notice.

PERFORMANCE CURVES - CNPAx

CNPA200-150-480

UL LISTED FM APPROVED

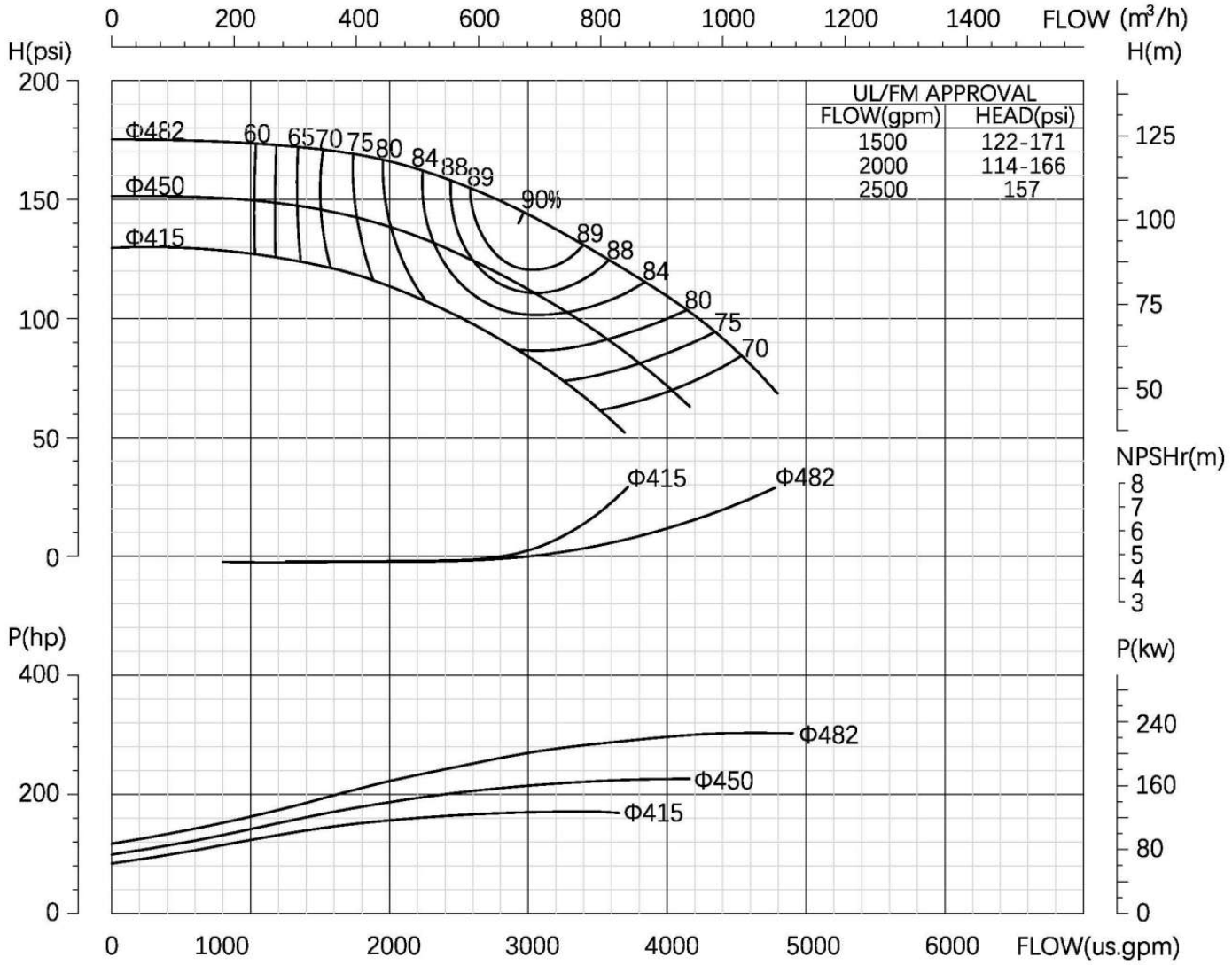

Flange rating(suction/discharge) : class 250，RF
Size : 8x6inch
Stages : 1
Frequency : 60Hz
Speed,rated : 1760rpm
Max working pressure,allowable : 278psi
Max suction pressure,allowable : 75psi
Max brake horse power : 172~303hp

Curve No.: CNPA206014@CNPA200-150-480@1760rpm@1500→2500usgpm

The contents of this publication must not be regarded as binding. EBARA ENGINEERING SINGAPORE PTE. LTD. reserves the right to effect any modification it deems necessary, without prior notice.

PERFORMANCE CURVES - CNPAx

CNPA200-150-480GL

UL LISTED FM APPROVED

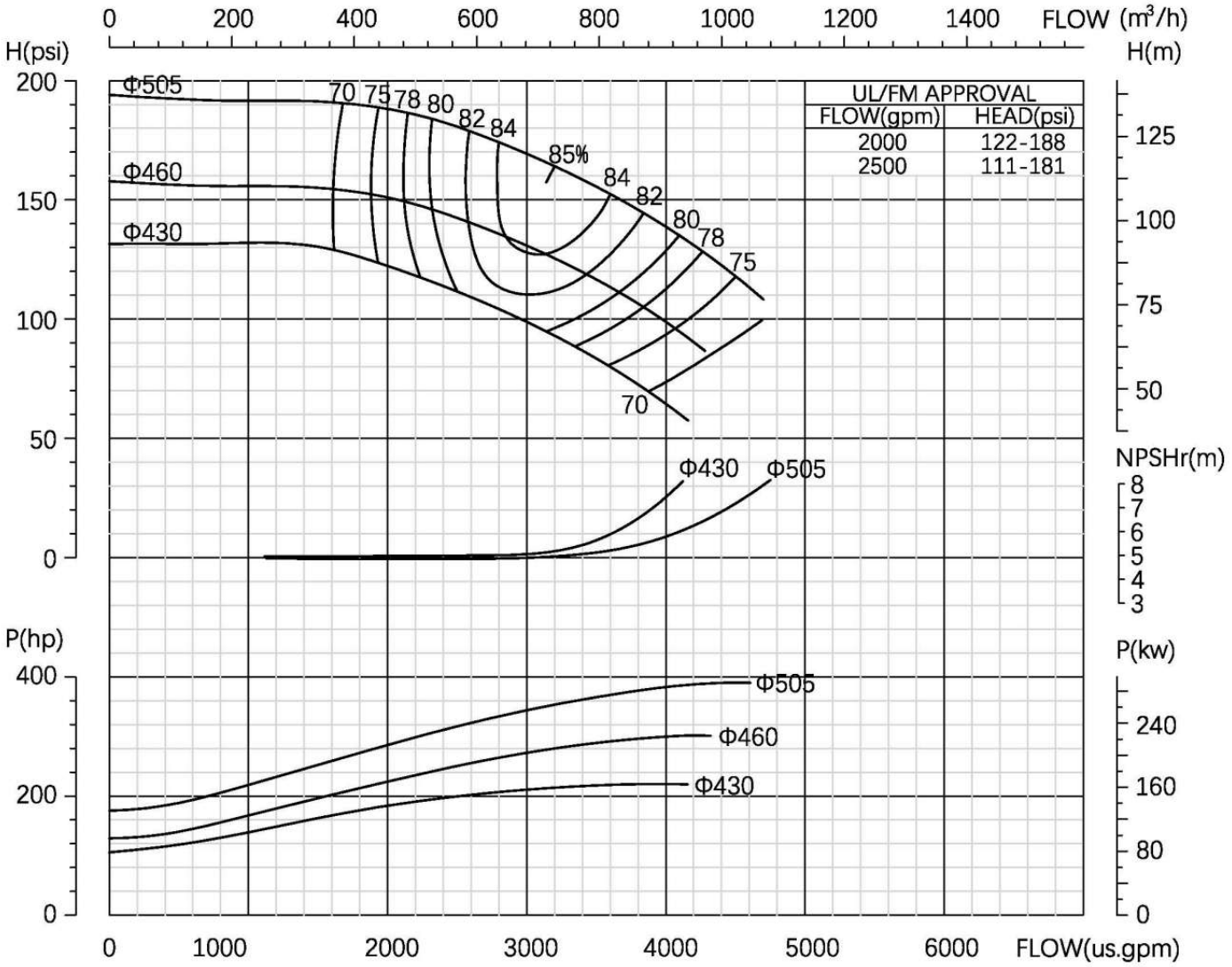

Flange rating(suction/discharge) : class 250，RF
Size : 8x6inch
Stages : 1
Frequency : 60Hz
Speed,rated : 1760rpm
Max working pressure,allowable : 275psi
Max suction pressure,allowable : 75psi
Max brake horse power : 218~389hp

Curve No.: CNPA206015@CNPA200-150-480GL@1760rpm@2000→2500usgpm

The contents of this publication must not be regarded as binding. EBARA ENGINEERING SINGAPORE PTE. LTD. reserves the right to effect any modification it deems necessary, without prior notice.

PERFORMANCE CURVES - CNPAx

CNPA250-200-450

UL LISTED FM APPROVED

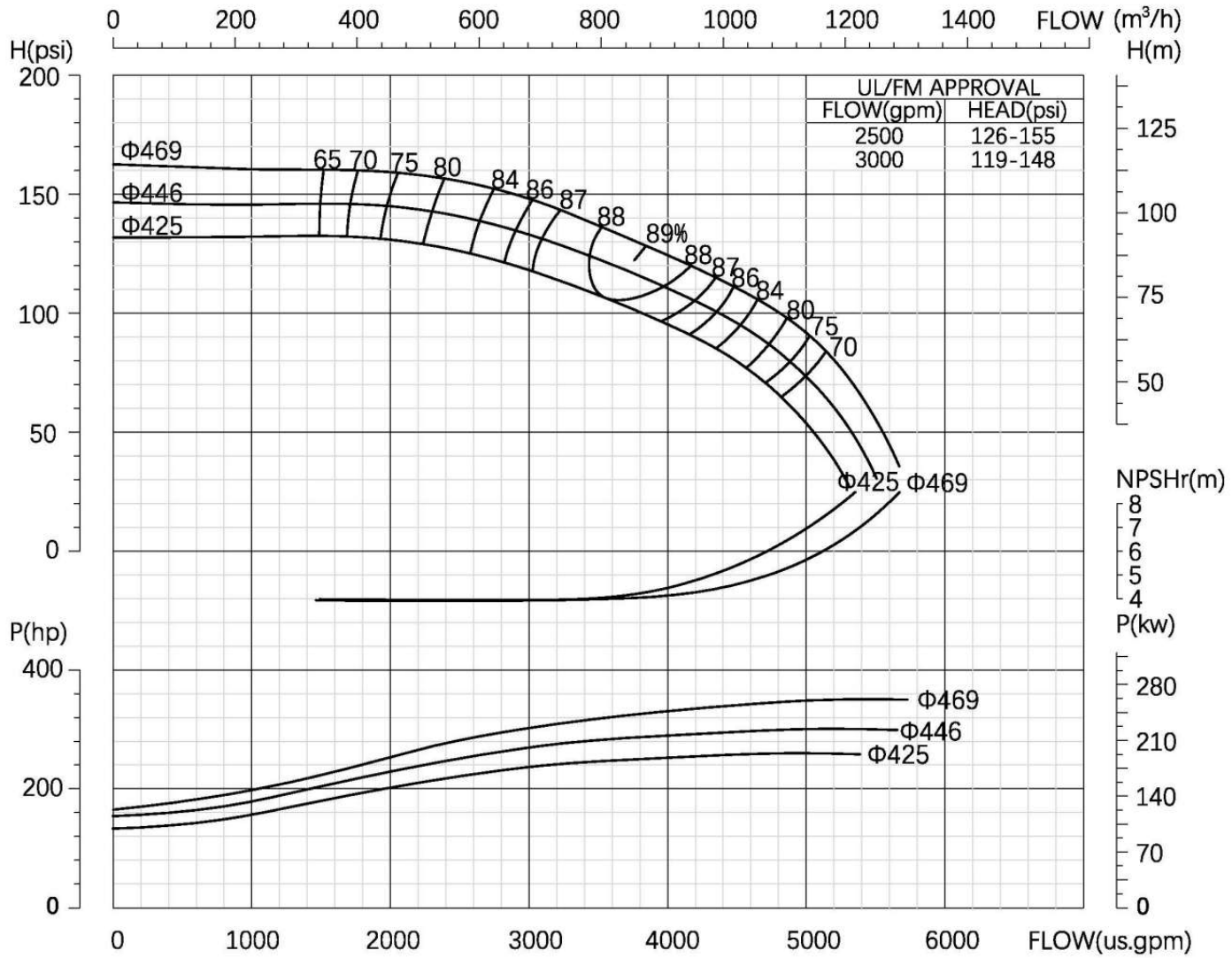

Flange rating(suction/discharge) : class 250，RF
Size : 10x8inch
Stages : 1
Frequency : 60Hz
Speed,rated :1760rpm
Max working pressure,allowable : 250psi
Max suction pressure,allowable : 75psi
Max brake horse power : 260-348hp

Curve No.: CNPA206016@CNPA250-200-450@1760rpm@2500→3000usgpm

The contents of this publication must not be regarded as binding. EBARA ENGINEERING SINGAPORE PTE. LTD. reserves the right to effect any modification it deems necessary, without prior notice.

PERFORMANCE CURVES - CNPAx

CNPA250-200-500

UL LISTED FM APPROVED

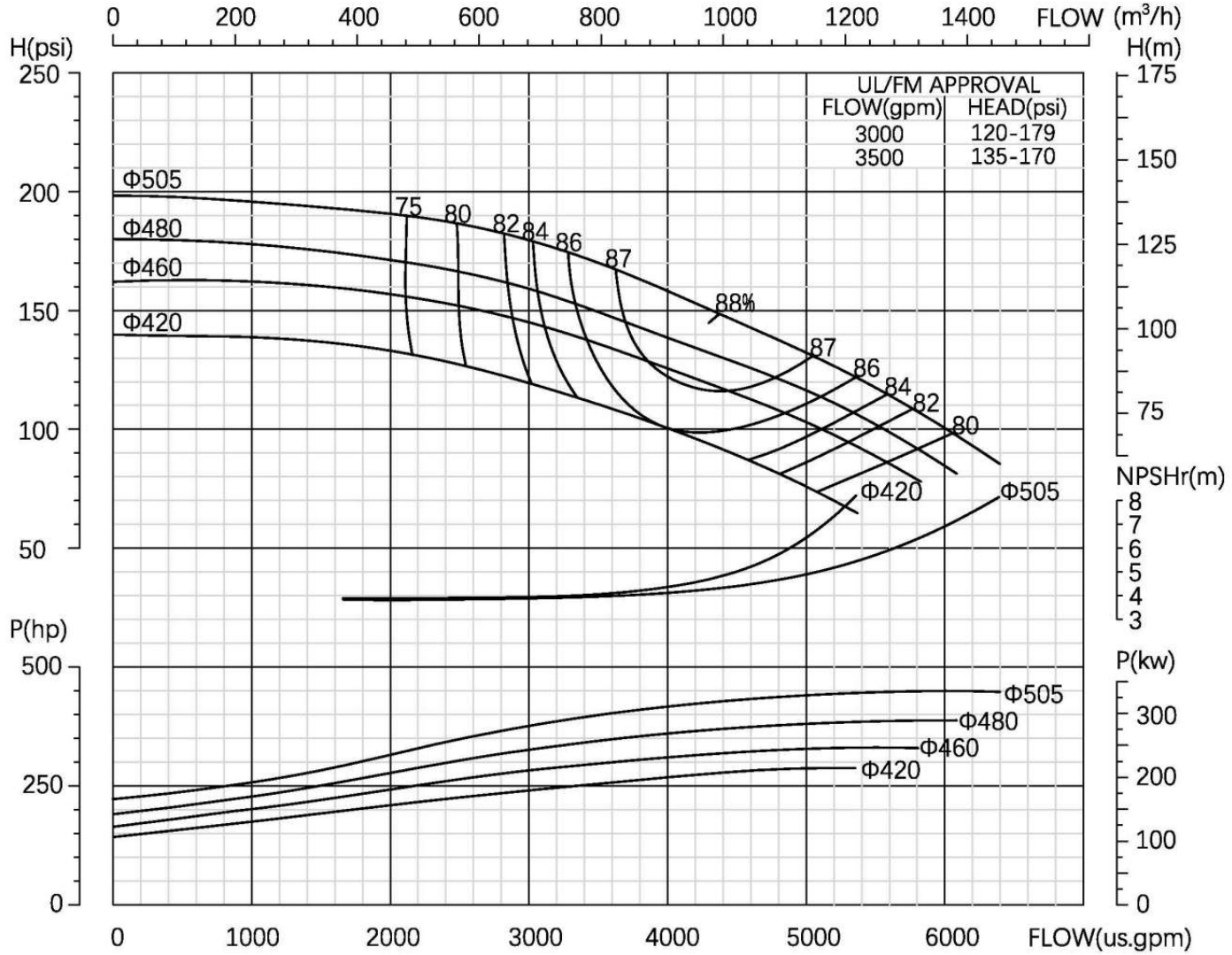

Flange rating(suction/discharge) : class 250，RF
Size : 10x8inch
Stages : 1
Frequency : 60Hz
Speed,rated :1760rpm
Max working pressure,allowable : 340psi
Max suction pressure,allowable : 75psi
Max brake horse power : 288-460hp

Curve No.: CNPA236017@CNPA250-200-500@1760rpm@3000→3500usgpm

The contents of this publication must not be regarded as binding. EBARA ENGINEERING SINGAPORE PTE. LTD. reserves the right to effect any modification it deems necessary, without prior notice.

PERFORMANCE CURVES - CNPAx

CNPA250-200-500S

UL LISTED FM APPROVED

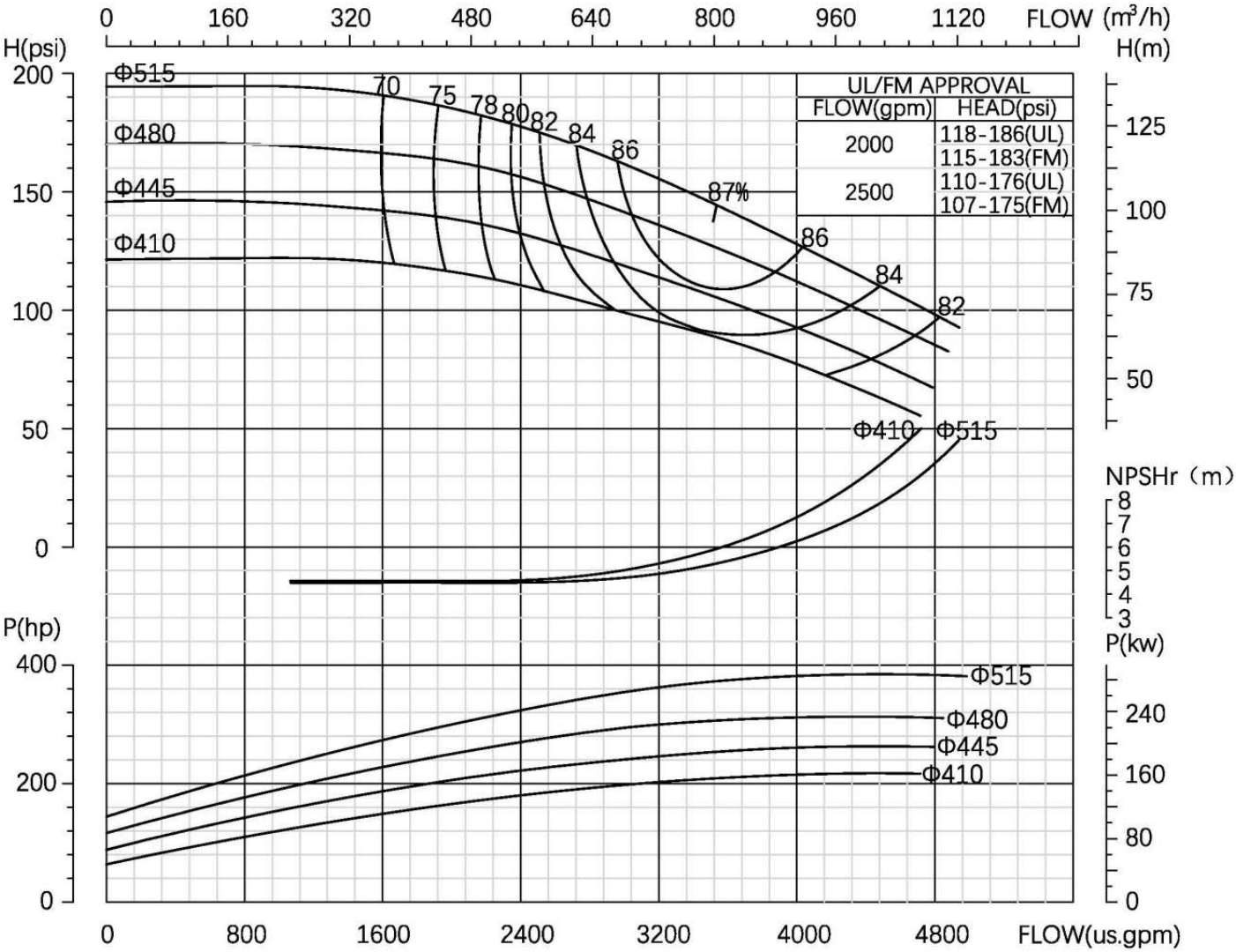

Flange rating(suction/discharge) : class 250，RF
Size : 10x8inch
Stages : 1
Frequency : 60Hz
Speed,rated : 1800rpm(UL),1760rpm(FM)
Max working pressure,allowable : 320psi
Max suction pressure,allowable : 75psi
Max brake horse power : 217-385hp

Curve No.: CNPA236018@CNPA250-200-500S@1760-1800rpm@2000→2500usgpm

The contents of this publication must not be regarded as binding. EBARA ENGINEERING SINGAPORE PTE. LTD. reserves the right to effect any modification it deems necessary, without prior notice.

PERFORMANCE CURVES - CNPAx

CNPA250-200-600

UL LISTED FM APPROVED

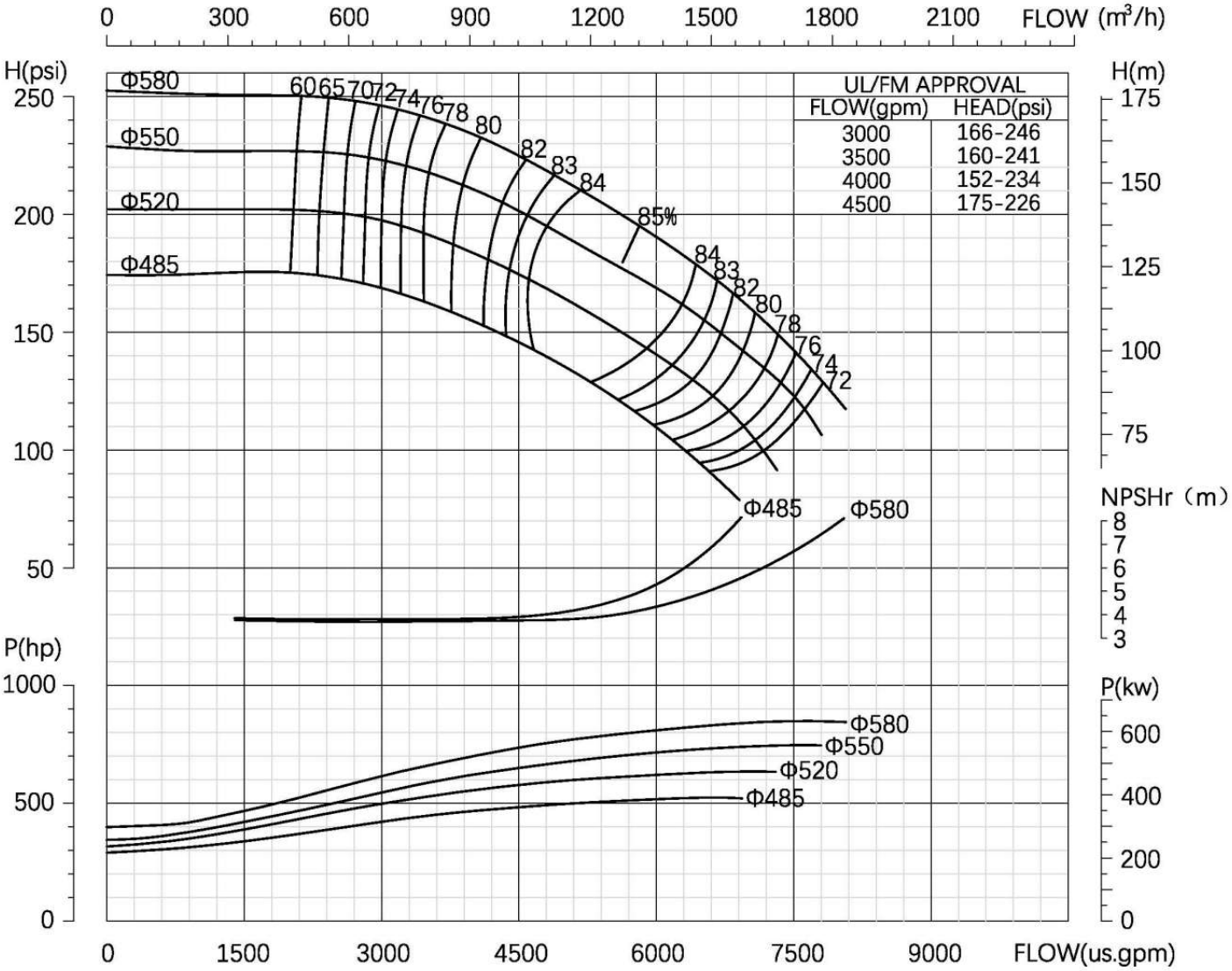

Flange rating(suction/discharge) : class 250，RF
Size : 10x8inch
Stages : 1
Frequency : 60Hz
Speed,rated : 1760rpm
Max working pressure,allowable : 330psi
Max suction pressure,allowable : 75psi
Max brake horse power : 510-842hp

Curve No.: CNPA206019@CNPA250-200-600@1760rpm@3000→4500usgpm

The contents of this publication must not be regarded as binding. EBARA ENGINEERING SINGAPORE PTE. LTD. reserves the right to effect any modification it deems necessary, without prior notice.

PERFORMANCE CURVES - CNPAX

CNPA300-250-500

UL LISTED FM APPROVED

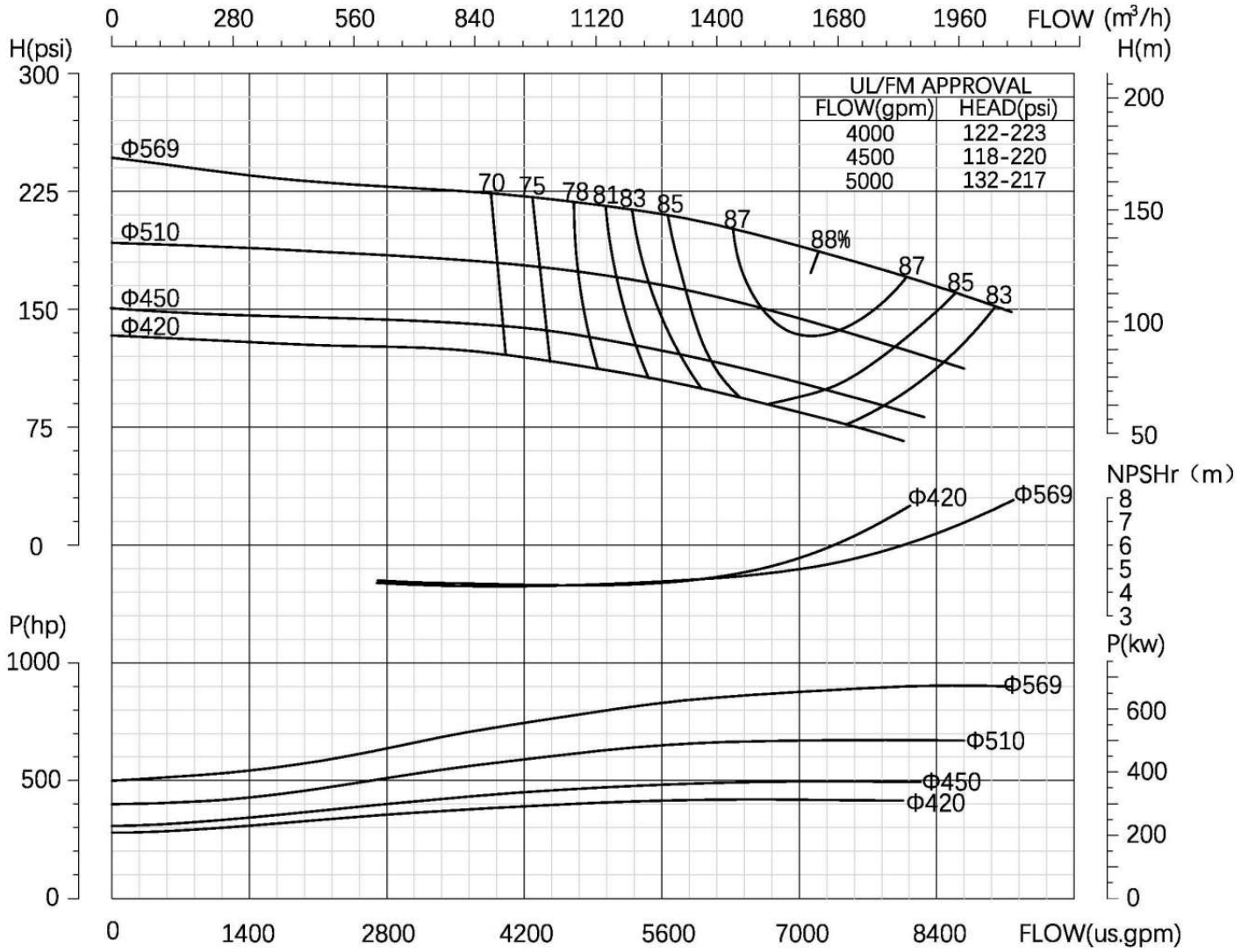

Flange rating(suction/discharge)	: class 250，RF
Size	: 12x10inch
Stages	: 1
Frequency	: 60Hz
Speed,rated	: 1800rpm
Max working pressure,allowable	: 330psi
Max suction pressure,allowable	: 75psi
Max brake horse power	: 418-904hp

Curve No.: CNPA206020@CNPA300-250-500@1800rpm@4000→5000usgpm

The contents of this publication must not be regarded as binding. EBARA ENGINEERING SINGAPORE PTE. LTD. reserves the right to effect any modification it deems necessary, without prior notice.

PERFORMANCE CURVES - CNPAX

CNPA300-250-600L

UL LISTED FM APPROVED

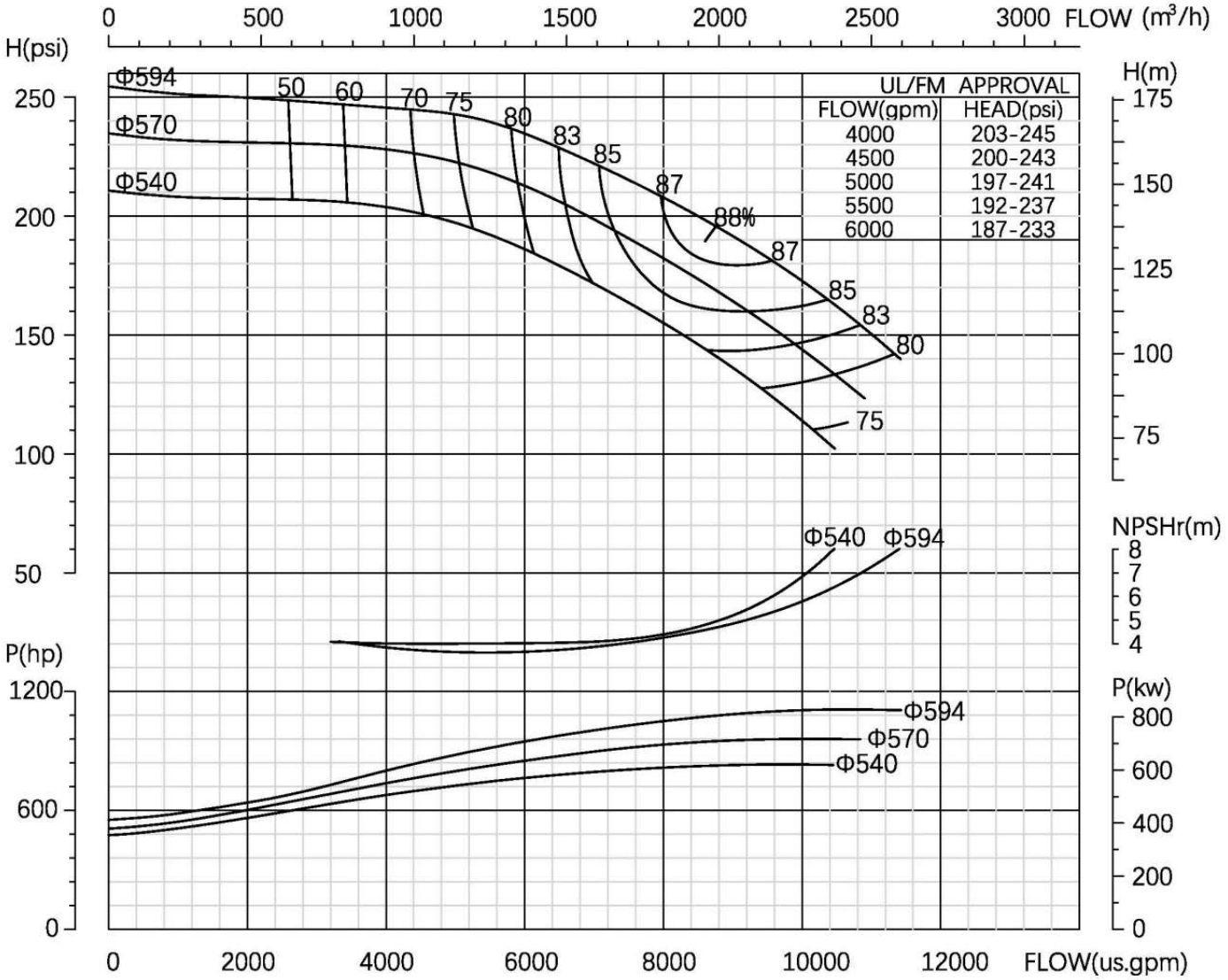

Flange rating(suction/discharge) : class 250，RF
Size : 12x10inch
Stages : 1
Frequency : 60Hz
Speed,rated : 1760rpm
Max working pressure,allowable : 350psi
Max suction pressure,allowable : 75psi
Max brake horse power : 832-1109hp

Curve No.: CNPA236026@CNPA300-250-600L@1760rpm@4000→6000usgpm

The contents of this publication must not be regarded as binding. EBARA ENGINEERING SINGAPORE PTE. LTD. reserves the right to effect any modification it deems necessary, without prior notice.

PERFORMANCE CURVES - CNPAX

CNPA350-250-640

UL LISTED FM APPROVED

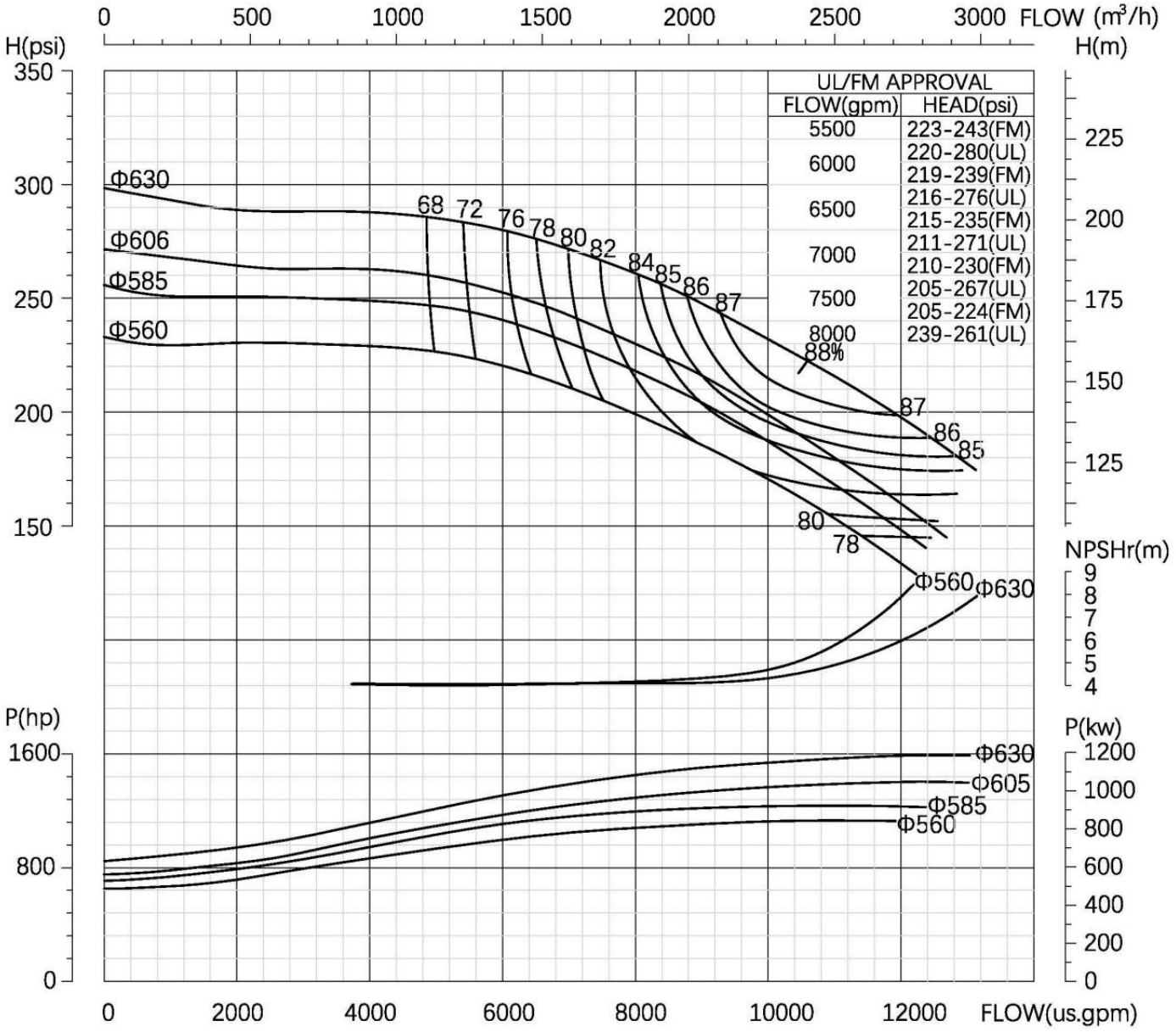

UL/FM APPROVAL	
FLOW(gpm)	HEAD(psi)
5500	223-243(FM)
6000	220-280(UL) 219-239(FM)
6500	216-276(UL) 215-235(FM)
7000	211-271(UL) 210-230(FM)
7500	205-267(UL) 205-224(FM)
8000	239-261(UL)

Flange rating(suction/discharge) : class 250，RF
Size : 14x10inch
Stages : 1
Frequency : 60Hz
Speed,rated : 1760rpm
Max working pressure,allowable : 300psi
Max suction pressure,allowable : 75psi
Max brake horse power : 1120-1591hp

Curve No.: CNPA206021@CNPA350-250-640@1760rpm@4000→7500usgpm

The contents of this publication must not be regarded as binding. EBARA ENGINEERING SINGAPORE PTE. LTD. reserves the right to effect any modification it deems necessary, without prior notice.

PERFORMANCE CURVES - CNPAx

CNPA125-80-250

UL LISTED FM APPROVED

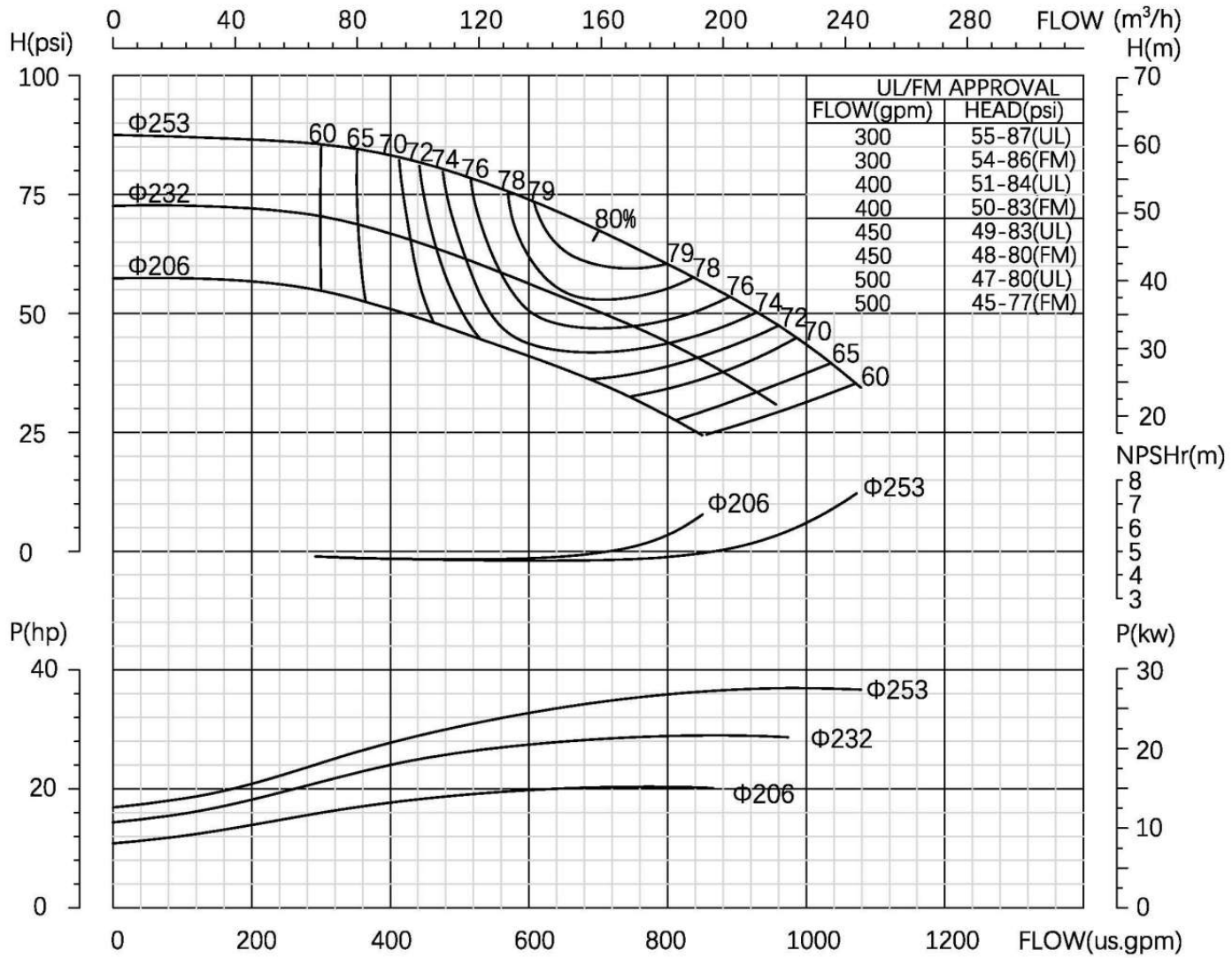

UL/FM APPROVAL	
FLOW(gpm)	HEAD(psi)
300	55-87(UL)
300	54-86(FM)
400	51-84(UL)
400	50-83(FM)
450	49-83(UL)
450	48-80(FM)
500	47-80(UL)
500	45-77(FM)

Flange rating(suction/discharge) : class 250，RF
Size : 5x3inch
Stages : 1
Speed,rated : 2350rpm
Max working pressure,allowable : 280psi
Max suction pressure,allowable : 75psi
Max brake horse power : 20~37hp

Curve No.: CNPA230001@CNPA125-80-250@2350rpm@300→500usgpm

The contents of this publication must not be regarded as binding. EBARA ENGINEERING SINGAPORE PTE. LTD. reserves the right to effect any modification it deems necessary, without prior notice.

PERFORMANCE CURVES - CNPAx

CNPA125-80-250

UL LISTED FM APPROVED

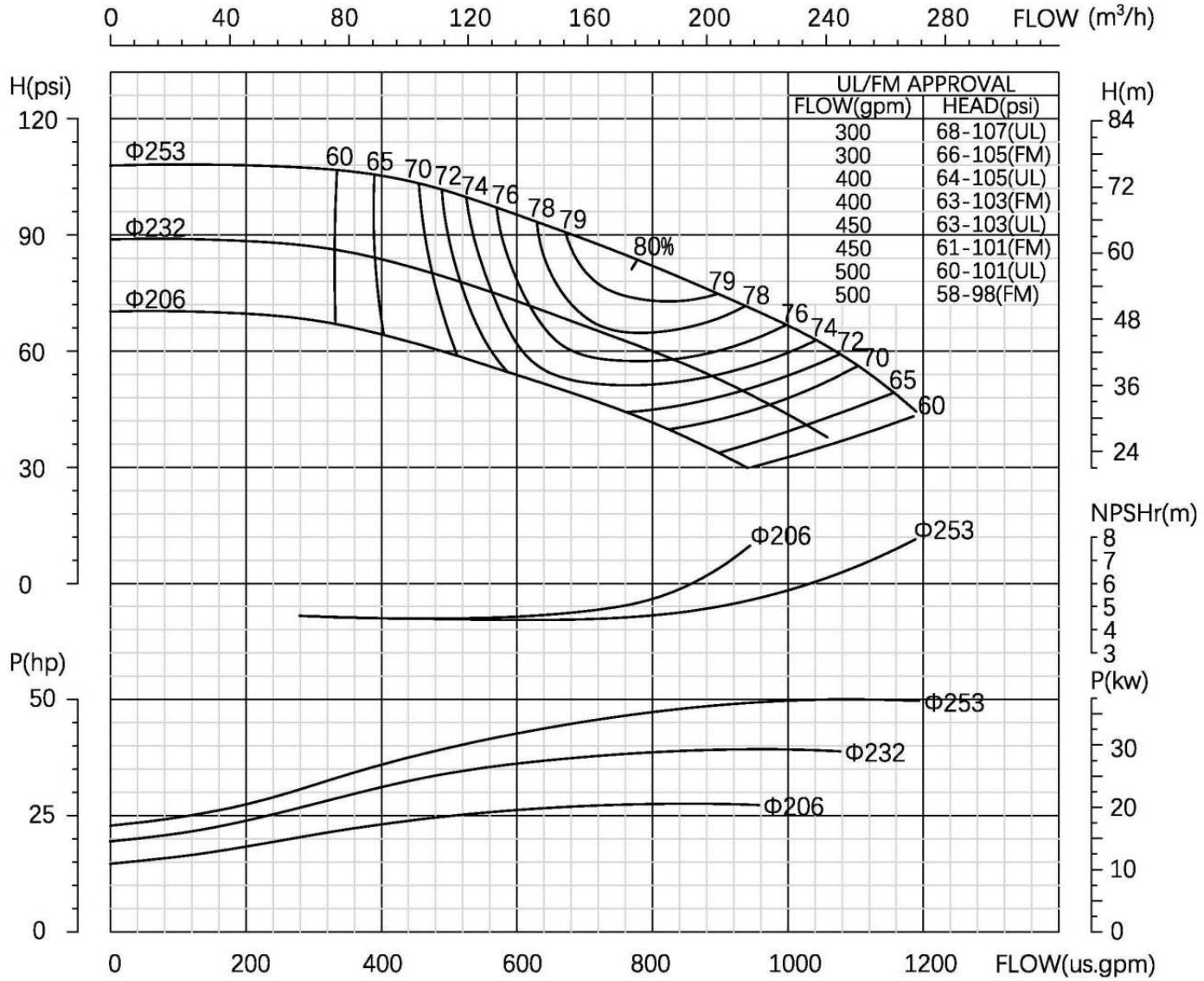

UL/FM APPROVAL	
FLOW(gpm)	HEAD(psi)
300	68-107(UL)
300	66-105(FM)
400	64-105(UL)
400	63-103(FM)
450	63-103(UL)
450	61-101(FM)
500	60-101(UL)
500	58-98(FM)

Flange rating(suction/discharge) : class 250，RF
Size : 5x3inch
Stages : 1
Speed,rated : 2600rpm
Max working pressure,allowable : 280psi
Max suction pressure,allowable : 75psi
Max brake horse power : 29~53hp

Curve No.: CNPA230002@CNPA125-80-250@2600rpm@300→500usgpm

The contents of this publication must not be regarded as binding. EBARA ENGINEERING SINGAPORE PTE. LTD. reserves the right to effect any modification it deems necessary, without prior notice.

PERFORMANCE CURVES - CNPAX

CNPA125-80-350

UL LISTED FM APPROVED

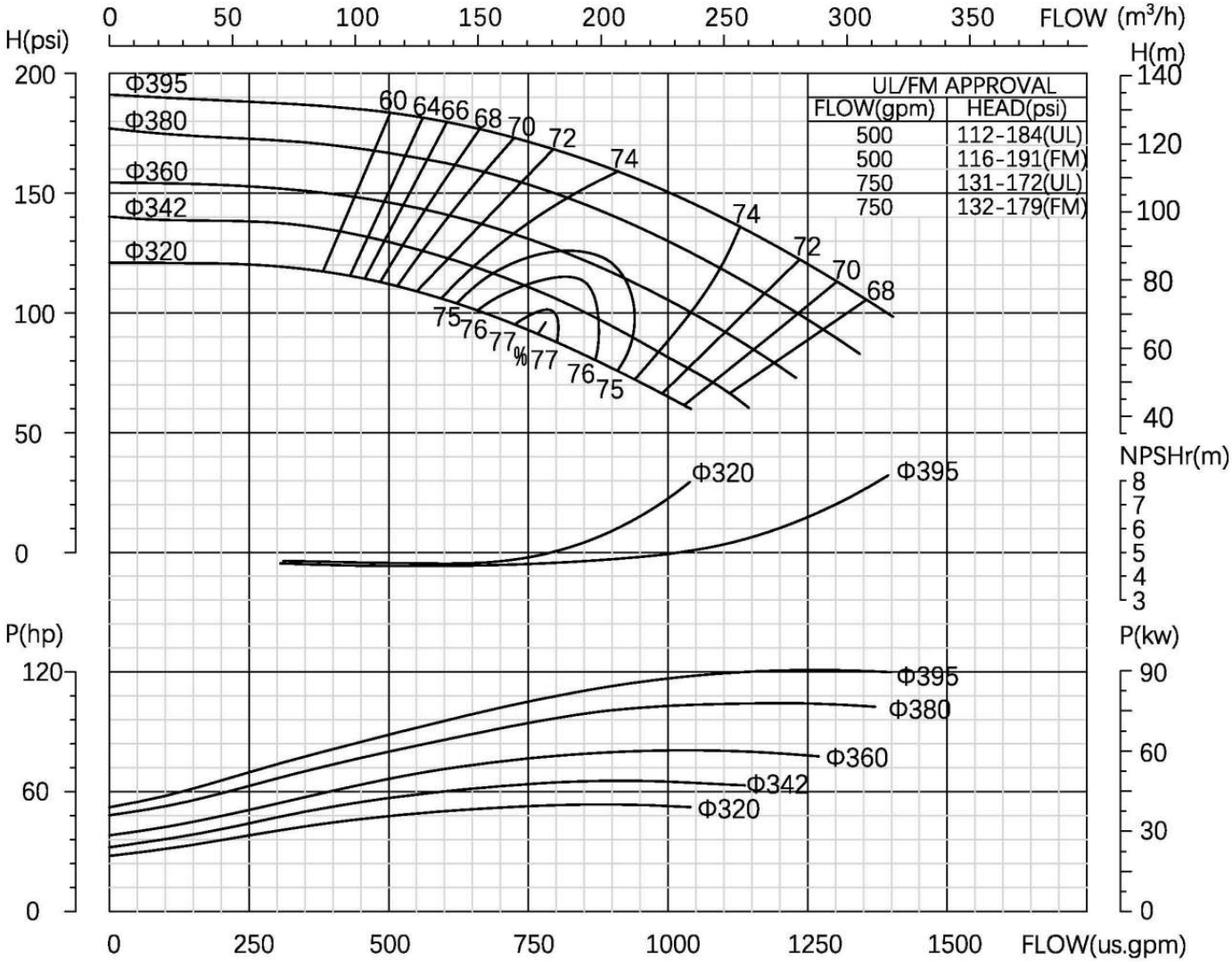

Flange rating(suction/discharge) : class 250，RF
Size : 5x3inch
Stages : 1
Speed,rated : 2350rpm(UL),2380rpm(FM)
Max working pressure,allowable : 380psi
Max suction pressure,allowable : 75psi
Max brake horse power : 53~121hp

Curve No.: CNPA230003@CNPA125-80-350@2350-2380rpm@500→750usgpm

The contents of this publication must not be regarded as binding. EBARA ENGINEERING SINGAPORE PTE. LTD. reserves the right to effect any modification it deems necessary, without prior notice.

PERFORMANCE CURVES - CNPAX

CNPA125-80-350

UL LISTED FM APPROVED

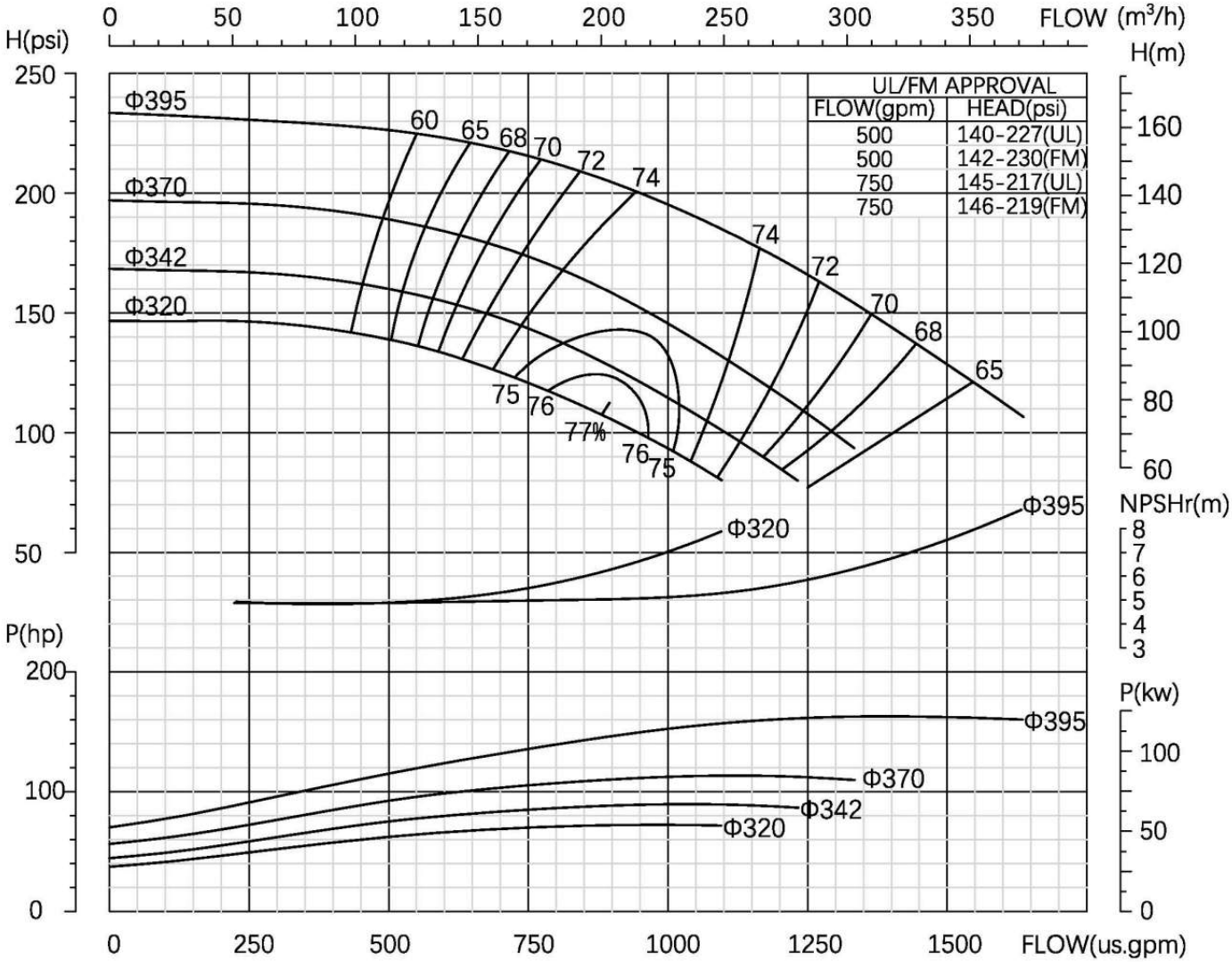

Flange rating(suction/discharge) : class 250，RF
Size : 5x3inch
Stages : 1
Speed,rated : 2600rpm
Max working pressure,allowable : 380psi
Max suction pressure,allowable : 75psi
Max brake horse power : 73~163hp

Curve No.: CNPA230004@CNPA125-80-350@2600rpm@500→750usgpm

The contents of this publication must not be regarded as binding. EBARA ENGINEERING SINGAPORE PTE. LTD. reserves the right to effect any modification it deems necessary, without prior notice.

PERFORMANCE CURVES - CNPAX

CNPA125-100-300

UL LISTED FM APPROVED

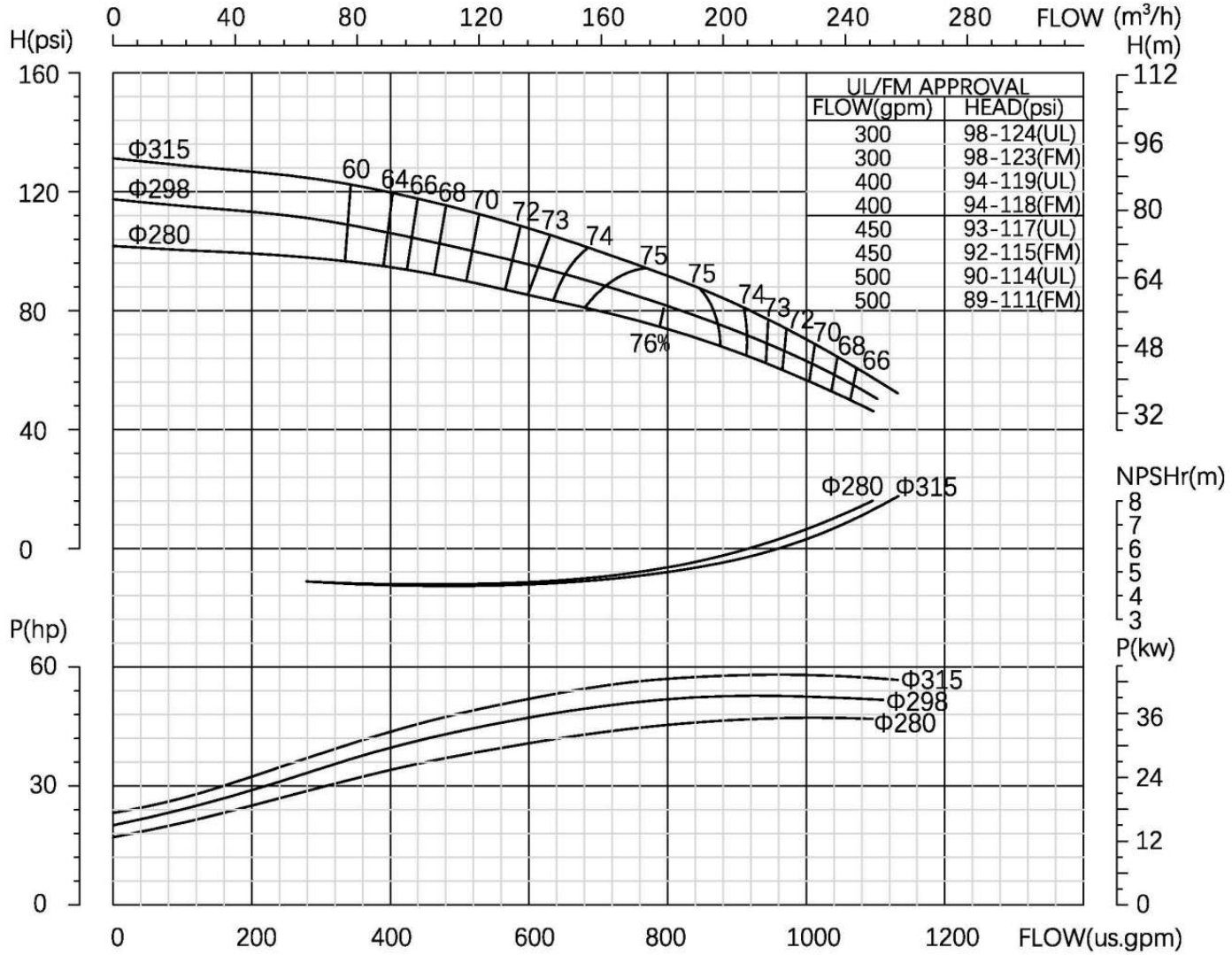

Flange rating(suction/discharge) : class 250，RF
Size : 5x4inch
Stages : 1
Speed,rated : 2350rpm
Max working pressure,allowable : 400psi
Max suction pressure,allowable : 75psi
Max brake horse power : 47~58hp

Curve No.: CNPA230005@CNPA125-100-300@2350rpm@300→500usgpm

The contents of this publication must not be regarded as binding. EBARA ENGINEERING SINGAPORE PTE. LTD. reserves the right to effect any modification it deems necessary, without prior notice.

PERFORMANCE CURVES - CNPAx

CNPA125-100-300

UL LISTED FM APPROVED

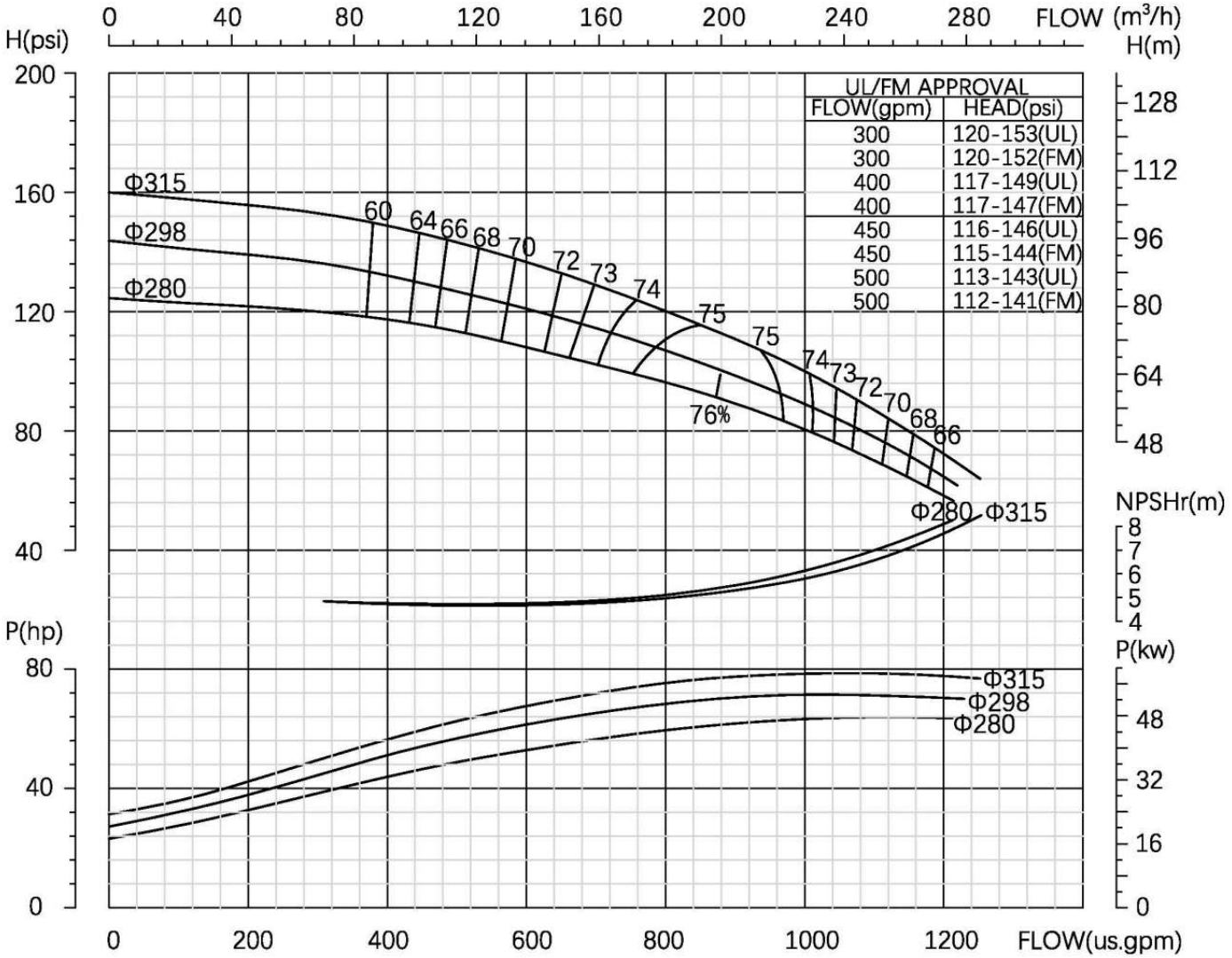

UL/FM APPROVAL	
FLOW(gpm)	HEAD(psi)
300	120-153(UL)
300	120-152(FM)
400	117-149(UL)
400	117-147(FM)
450	116-146(UL)
450	115-144(FM)
500	113-143(UL)
500	112-141(FM)

Flange rating(suction/discharge) : class 250，RF
Size : 5x4inch
Stages : 1
Speed,rated : 2600rpm
Max working pressure,allowable : 400psi
Max suction pressure,allowable : 75psi
Max brake horse power : 64~79hp

Curve No.: CNPA230006@CNPA125-100-300@2600rpm@300→500usgpm

The contents of this publication must not be regarded as binding. EBARA ENGINEERING SINGAPORE PTE. LTD. reserves the right to effect any modification it deems necessary, without prior notice.

PERFORMANCE CURVES - CNPAx

CNPA150-125-250

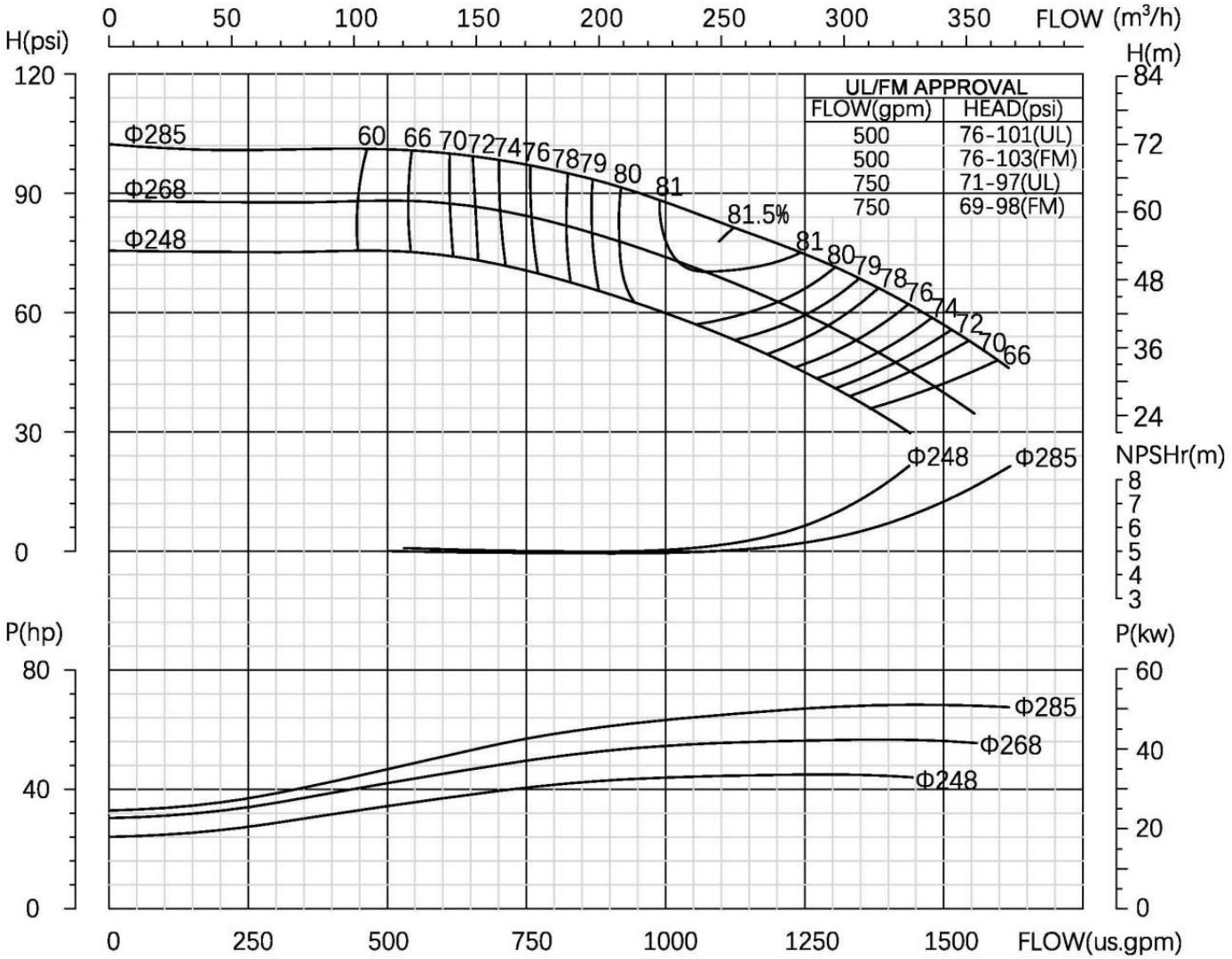

Flange rating(suction/discharge) : class 250，RF
Size : 6x5inch
Stages : 1
Speed,rated : 2350rpm
Max working pressure,allowable : 310psi
Max suction pressure,allowable : 75psi
Max brake horse power : 45~68hp

Curve No.: CNPA230007@CNPA150-125-250@2350rpm@500→750usgpm

The contents of this publication must not be regarded as binding. EBARA ENGINEERING SINGAPORE PTE. LTD. reserves the right to effect any modification it deems necessary, without prior notice.

PERFORMANCE CURVES - CNPAx

CNPA150-125-250

UL LISTED FM APPROVED

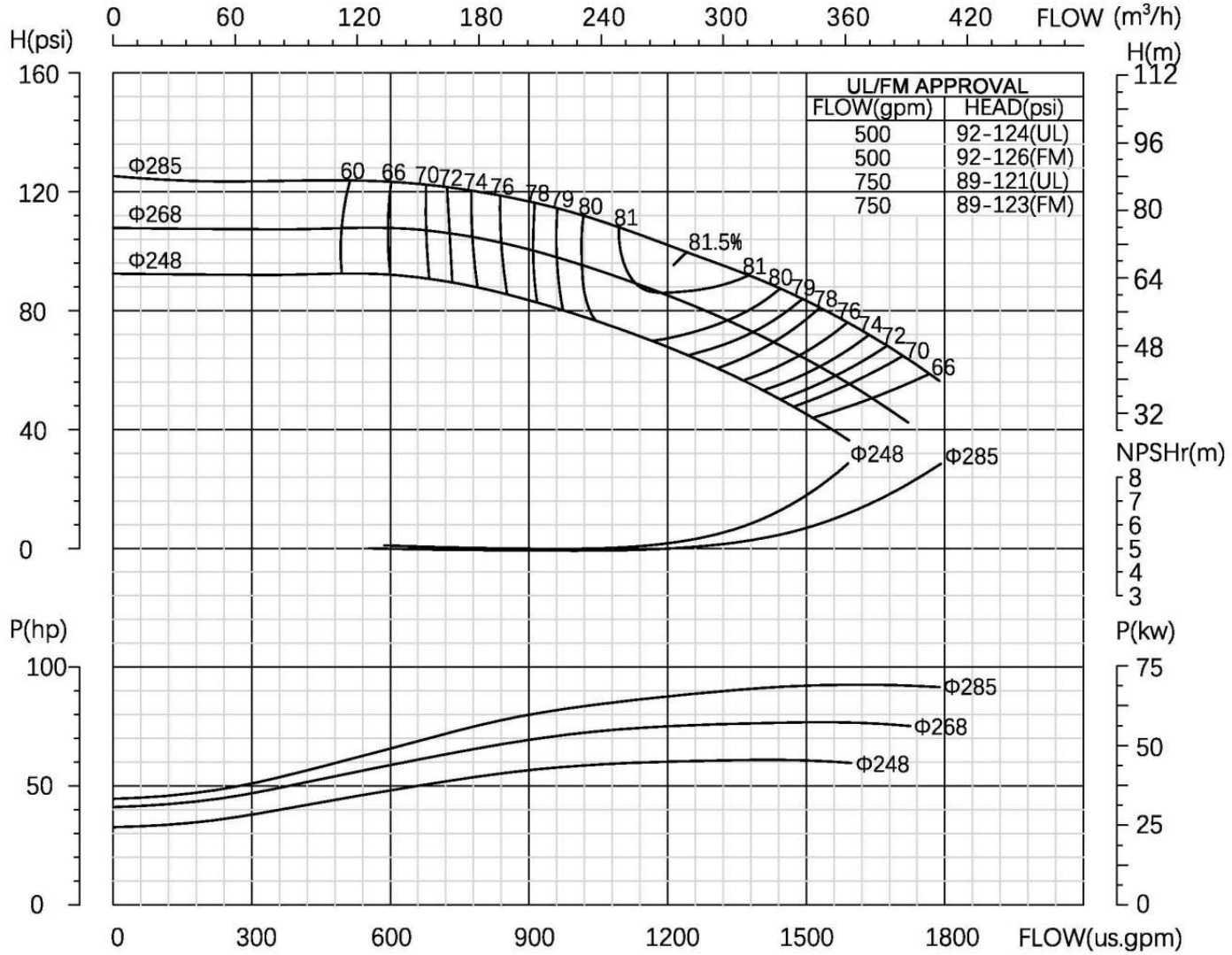

Flange rating(suction/discharge) : class 250，RF
Size : 6x5inch
Stages : 1
Speed,rated : 2600rpm
Max working pressure,allowable : 310psi
Max suction pressure,allowable : 75psi
Max brake horse power : 61~92hp

Curve No.: CNPA230008@CNPA150-125-250@2600rpm@500→750usgpm

The contents of this publication must not be regarded as binding. EBARA ENGINEERING SINGAPORE PTE. LTD. reserves the right to effect any modification it deems necessary, without prior notice.

PERFORMANCE CURVES - CNPAx

CNPA150-125-310

UL LISTED FM APPROVED

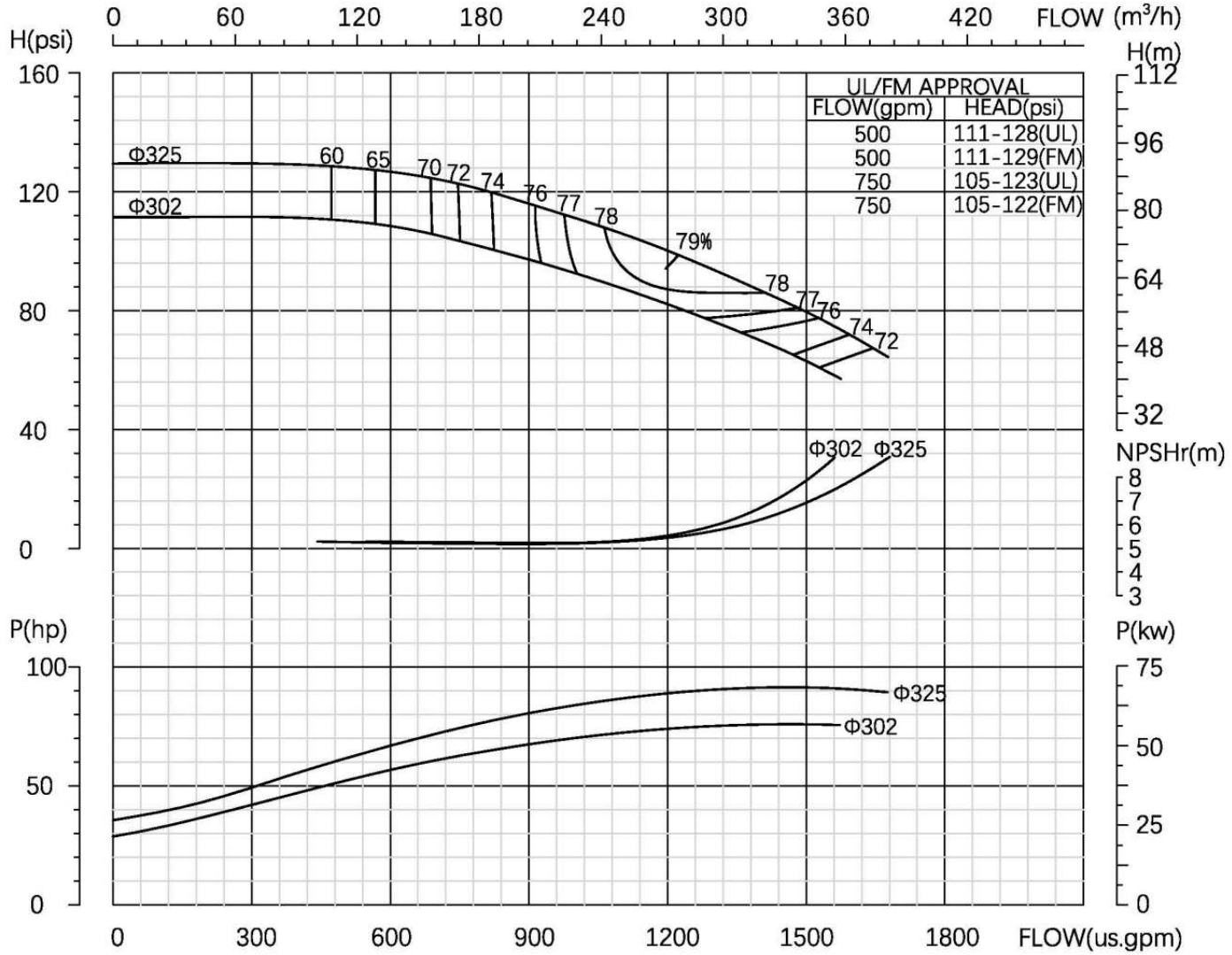

Flange rating(suction/discharge) : class 250，RF
Size : 6x5inch
Stages : 1
Speed,rated : 2350rpm
Max working pressure,allowable : 370psi
Max suction pressure,allowable : 75psi
Max brake horse power : 76~91hp

Curve No.: CNPA230009@CNPA150-125-310@2350rpm@500→750usgpm

The contents of this publication must not be regarded as binding. EBARA ENGINEERING SINGAPORE PTE. LTD. reserves the right to effect any modification it deems necessary, without prior notice.

PERFORMANCE CURVES - CNPAx

CNPA150-125-310

UL LISTED FM APPROVED

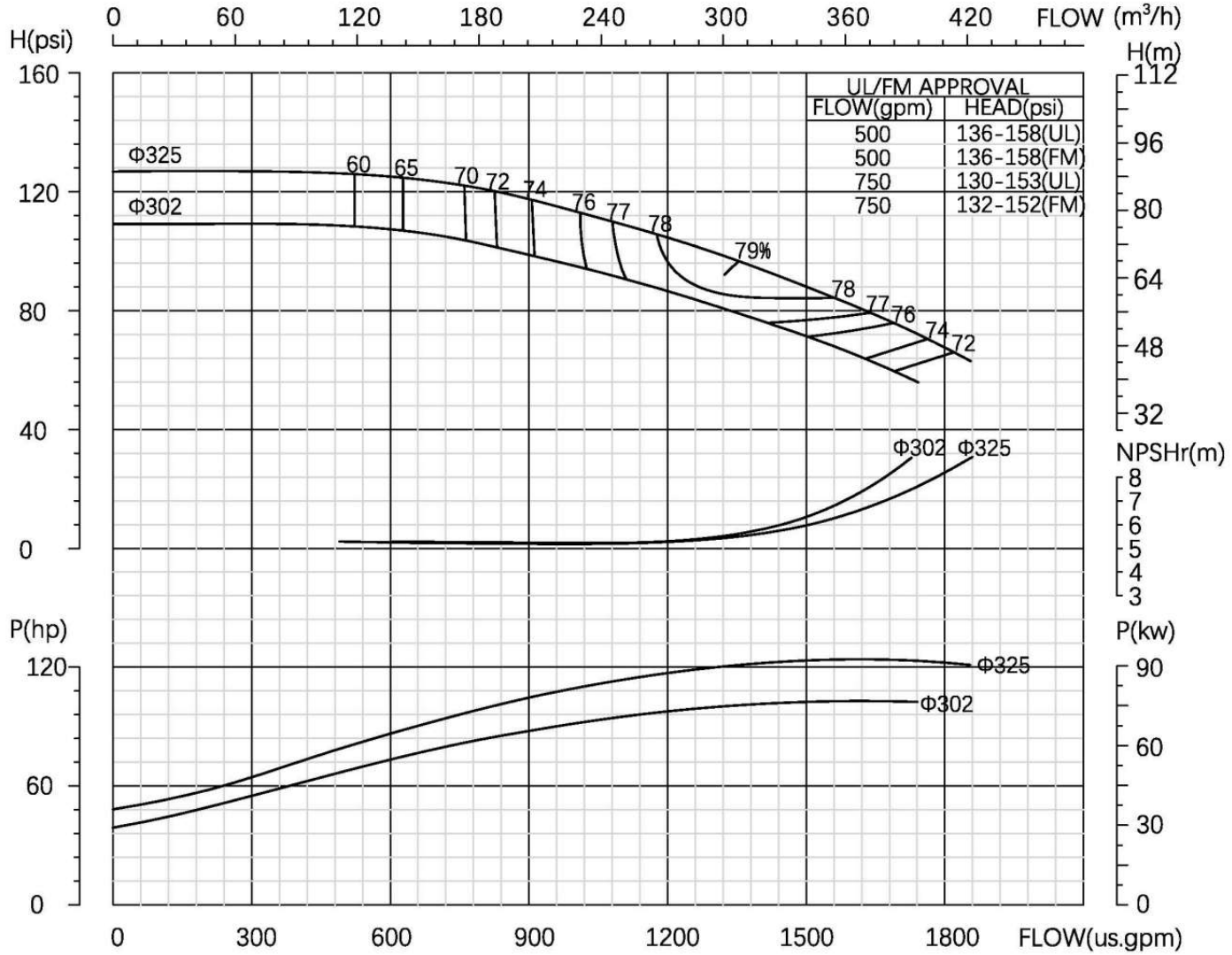

Flange rating(suction/discharge) : class 250，RF
Size : 6x5inch
Stages : 1
Speed,rated : 2600rpm
Max working pressure,allowable : 370psi
Max suction pressure,allowable : 75psi
Max brake horse power : 103~124hp

Curve No.: CNPA230010@CNPA150-125-310@2600rpm@500→750usgpm

The contents of this publication must not be regarded as binding. EBARA ENGINEERING SINGAPORE PTE. LTD. reserves the right to effect any modification it deems necessary, without prior notice.

PERFORMANCE CURVES - CNPAx

CNPA200-150-310

UL LISTED FM APPROVED

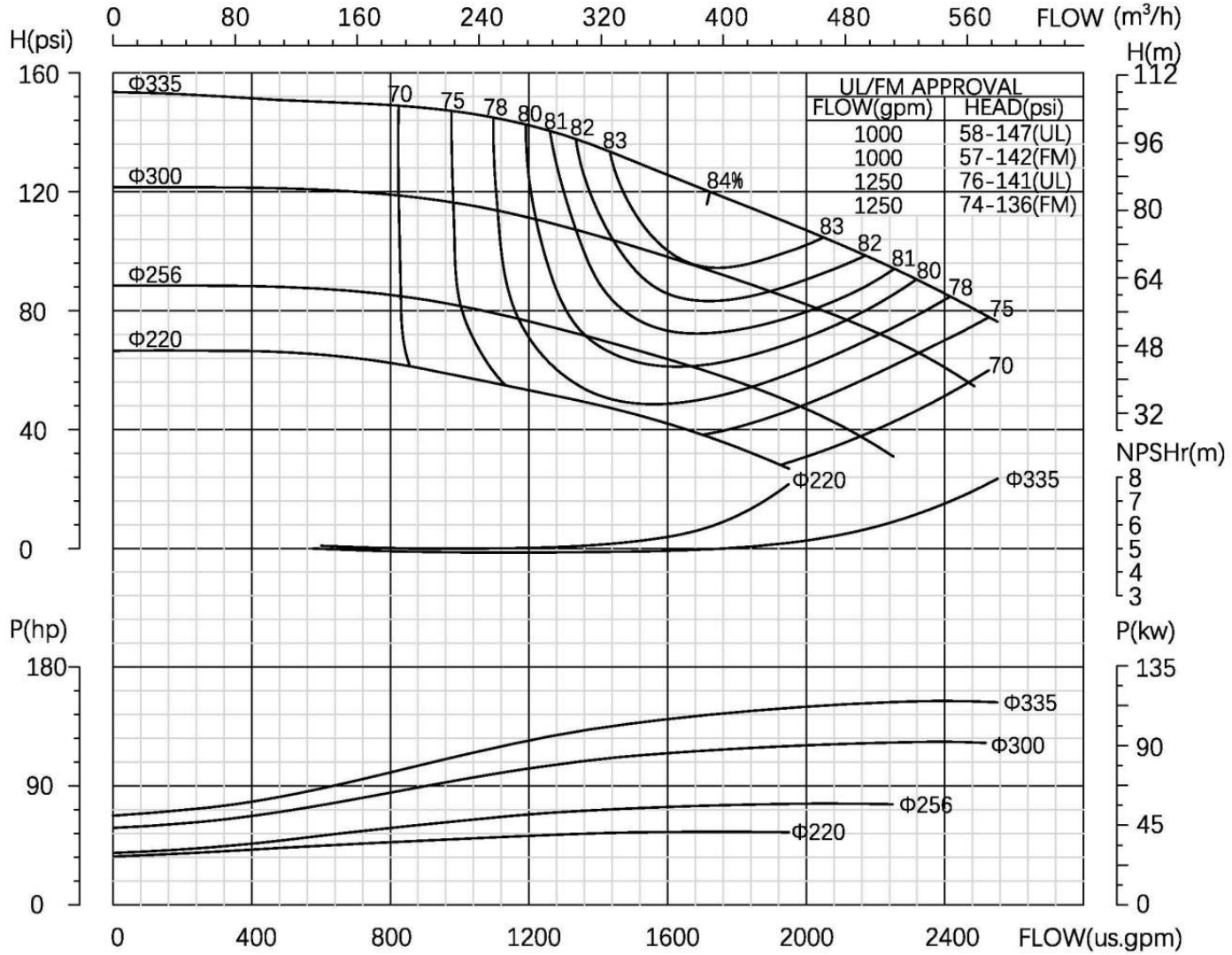

Flange rating(suction/discharge) : class 250，RF
Size : 8x6inch
Stages : 1
Speed,rated : 2350rpm
Max working pressure,allowable : 370psi
Max suction pressure,allowable : 75psi
Max brake horse power : 55~154hp

Curve No.: CNPA230011@CNPA200-150-310@2350rpm@1000→1250usgpm

The contents of this publication must not be regarded as binding. EBARA ENGINEERING SINGAPORE PTE. LTD. reserves the right to effect any modification it deems necessary, without prior notice.

PERFORMANCE CURVES - CNPAX

CNPA200-150-310

UL LISTED FM APPROVED

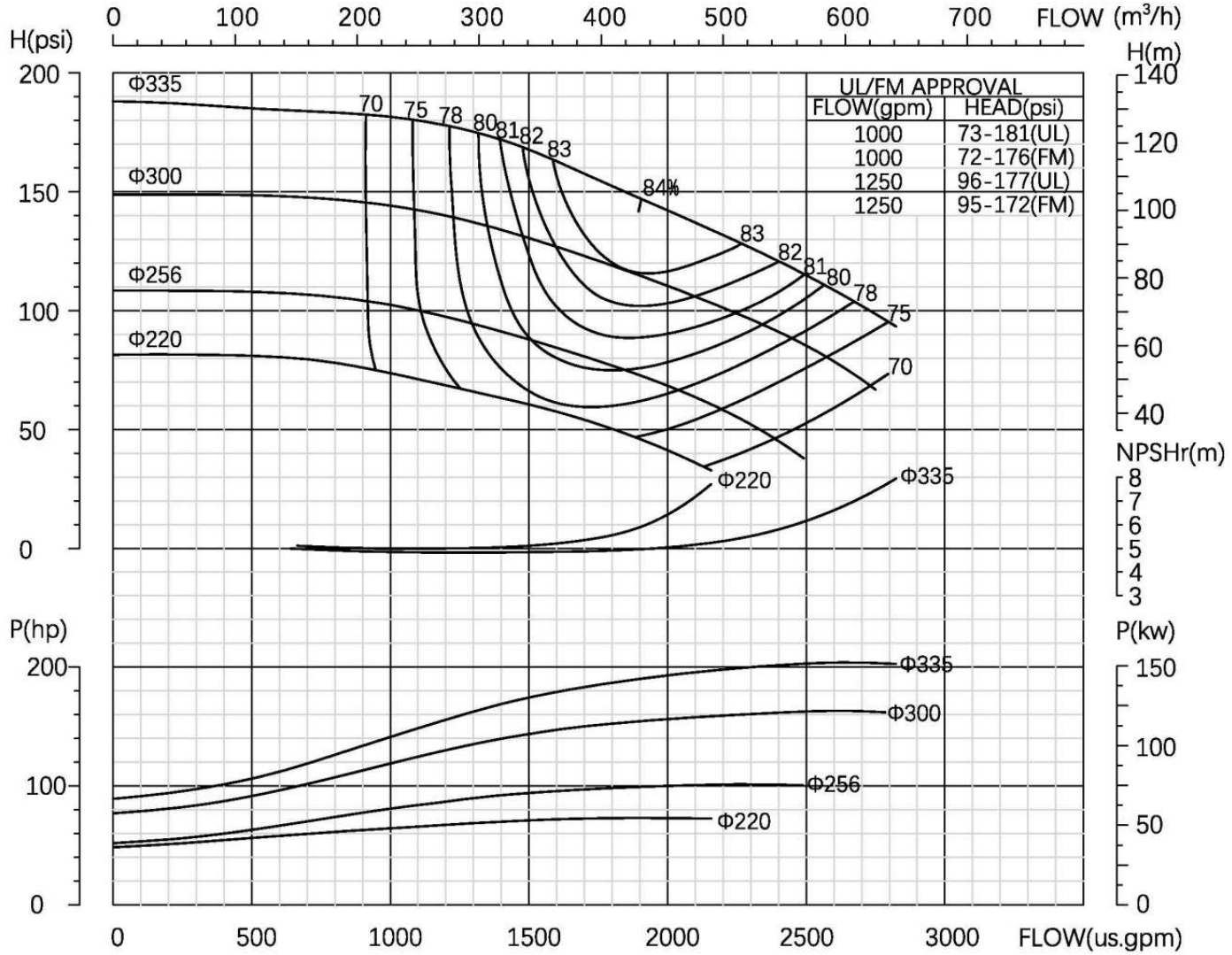

Flange rating(suction/discharge) : class 250，RF
Size : 8x6inch
Stages : 1
Speed,rated : 2600rpm
Max working pressure,allowable : 370psi
Max suction pressure,allowable : 75psi
Max brake horse power : 75~209hp

Curve No.: CNPA230012@CNPA200-150-310@2600rpm@1000→1250usgpm

The contents of this publication must not be regarded as binding. EBARA ENGINEERING SINGAPORE PTE. LTD. reserves the right to effect any modification it deems necessary, without prior notice.

PERFORMANCE CURVES - CNPAx

CNPA200-150-330

UL LISTED FM APPROVED

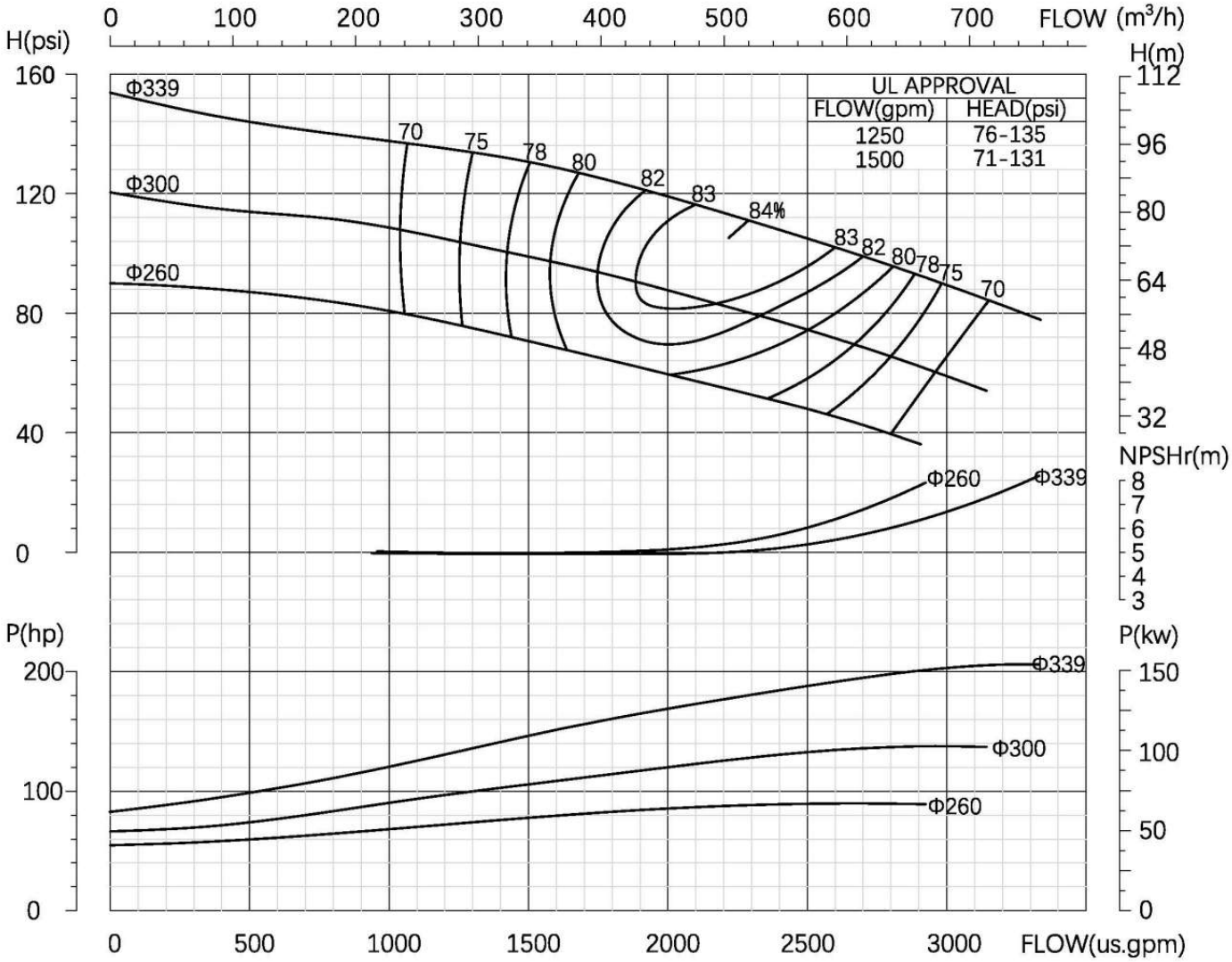

Flange rating(suction/discharge) : class 250，RF
Size : 8x6inch
Stages : 1
Speed,rated : 2350rpm
Max working pressure,allowable : 310psi
Max suction pressure,allowable : 75psi
Max brake horse power : 90~205hp

Curve No.: CNPA230013@CNPA200-150-330@2350rpm@1250→1500usgpm

The contents of this publication must not be regarded as binding. EBARA ENGINEERING SINGAPORE PTE. LTD. reserves the right to effect any modification it deems necessary, without prior notice.

PERFORMANCE CURVES - CNPAx

CNPA200-150-330

UL LISTED FM APPROVED

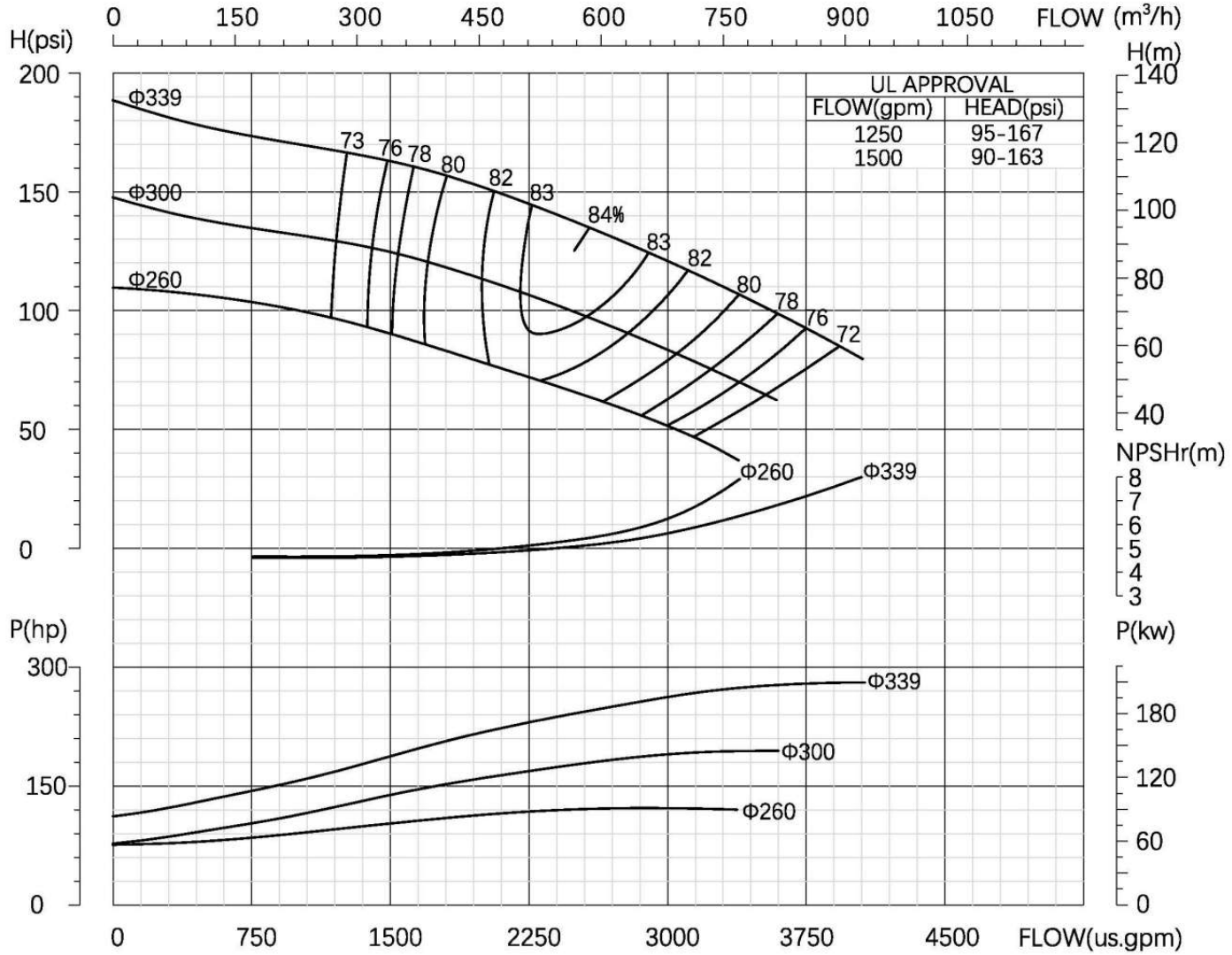

Flange rating(suction/discharge) : class 250，RF
Size : 8x6inch
Stages : 1
Speed,rated : 2600rpm
Max working pressure,allowable : 310psi
Max suction pressure,allowable : 75psi
Max brake horse power : 121~280hp

Curve No.: CNPA200014@CNPA200-150-330@2600rpm@1250→1500usgpm

The contents of this publication must not be regarded as binding. EBARA ENGINEERING SINGAPORE PTE. LTD. reserves the right to effect any modification it deems necessary, without prior notice.

PERFORMANCE CURVES - CNPAx

CNPA200-150-375

UL LISTED FM APPROVED

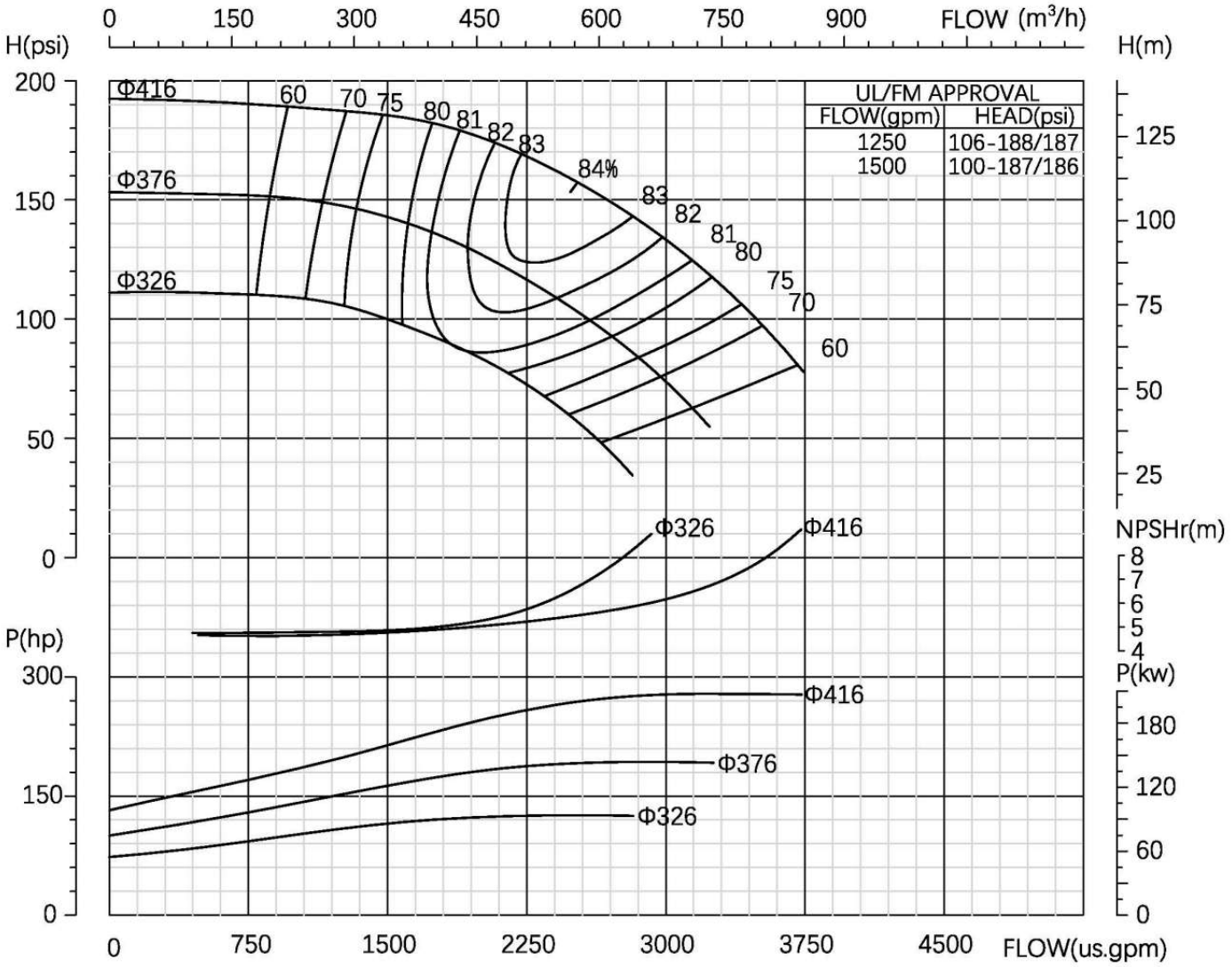

Flange rating(suction/discharge) : class 250，RF
Size : 8x6inch
Stages : 1
Speed,rated : 2100rpm
Max working pressure,allowable : 270psi
Max suction pressure,allowable : 75psi
Max brake horse power : 125~276hp

Curve No.: CNPA230015@CNPA200-150-375@2100rpm@1250→1500usgpm

The contents of this publication must not be regarded as binding. EBARA ENGINEERING SINGAPORE PTE. LTD. reserves the right to effect any modification it deems necessary, without prior notice.

PERFORMANCE CURVES - CNPAX

CNPA200-150-400

UL LISTED FM APPROVED

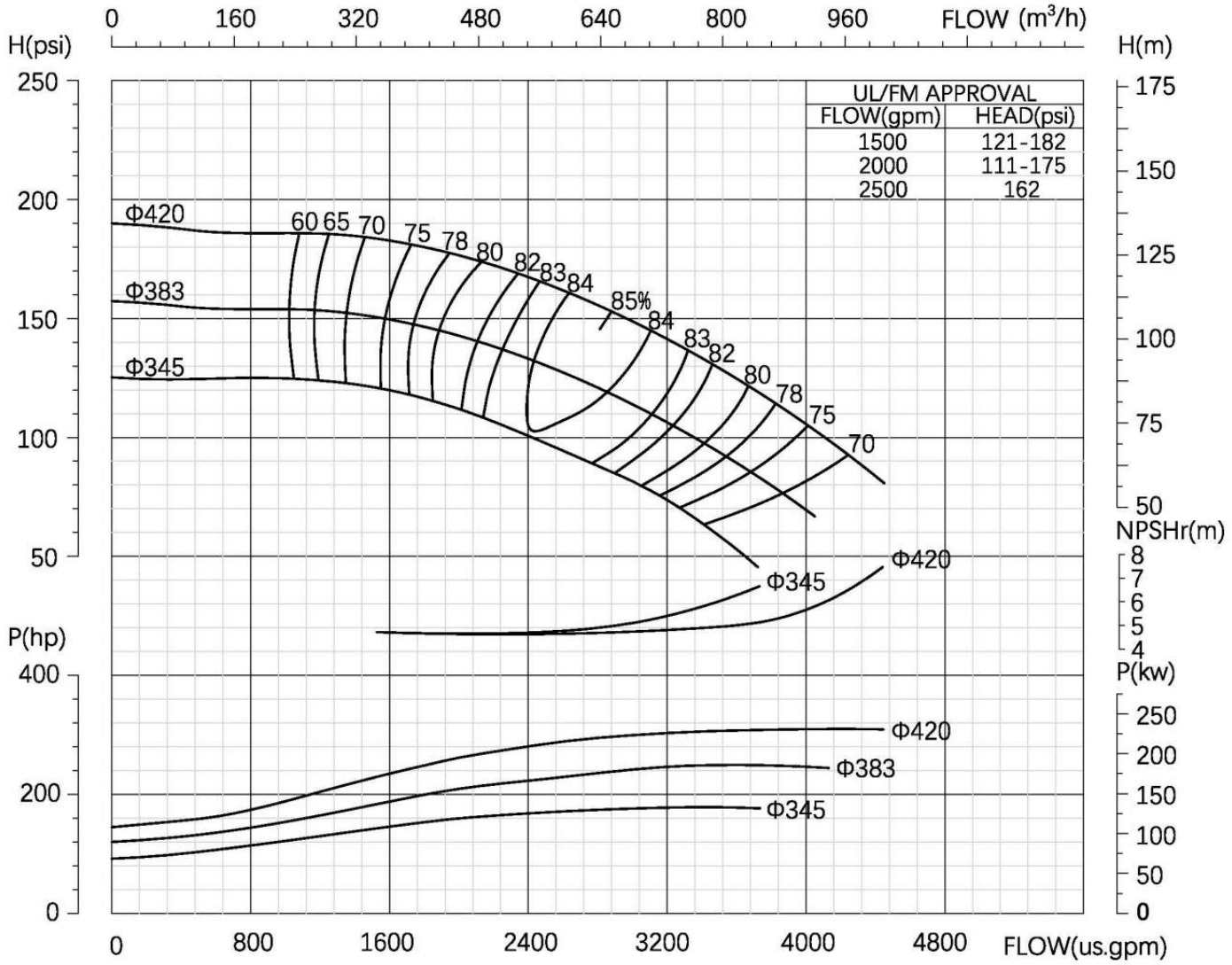

Flange rating(suction/discharge) : class 250，RF
Size : 8x6inch
Stages : 1
Speed,rated : 2100rpm
Max working pressure,allowable : 270psi
Max suction pressure,allowable : 75psi
Max brake horse power : 182~310hp

Curve No.: CNPA200016@CNPA200-150-400@2100rpm@1500→2500usgpm

The contents of this publication must not be regarded as binding. EBARA ENGINEERING SINGAPORE PTE. LTD. reserves the right to effect any modification it deems necessary, without prior notice.

PERFORMANCE CURVES - CNPAX

CNPA250-200-450

UL LISTED FM APPROVED

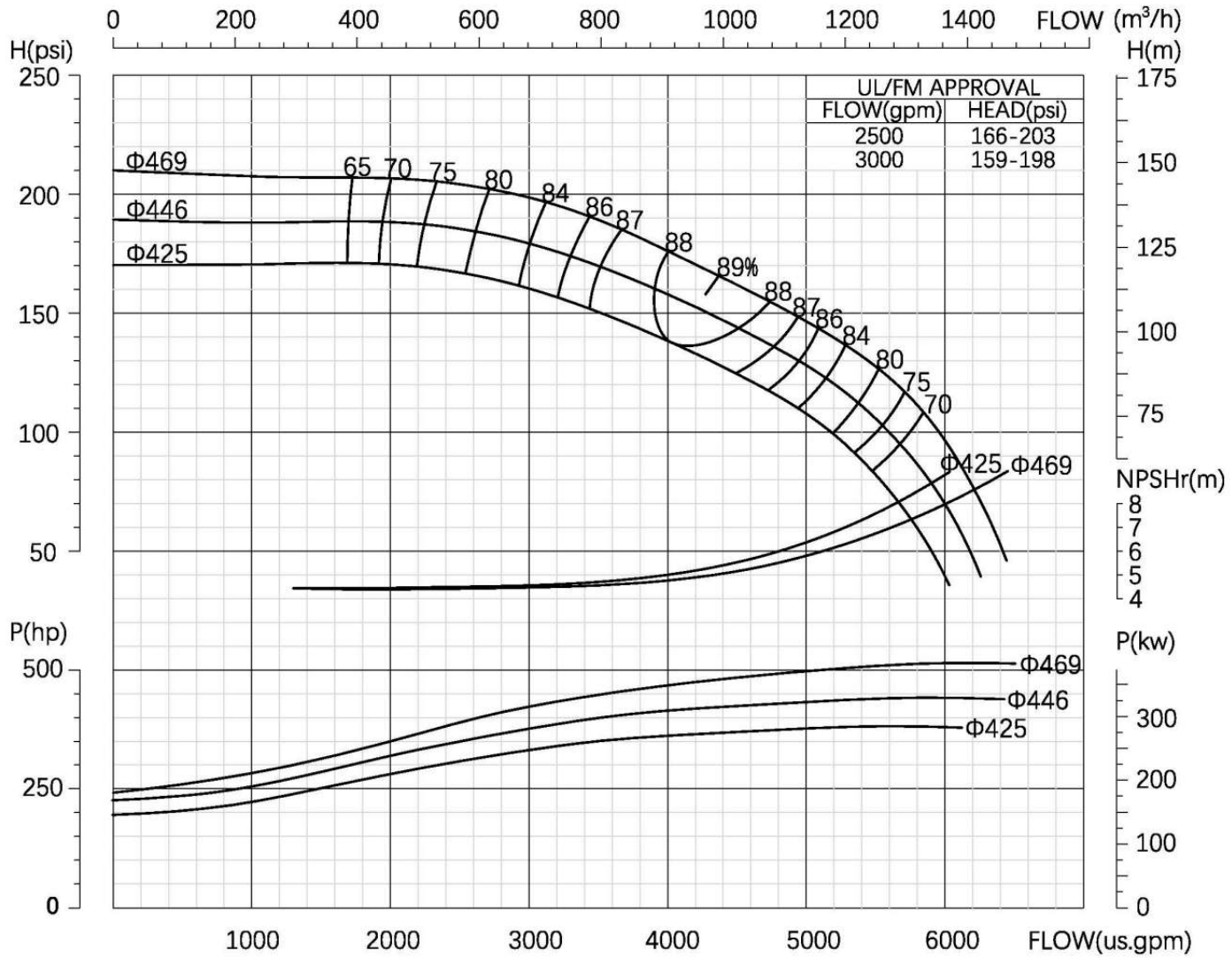

Flange rating(suction/discharge) : class 250，RF
Size : 10x8inch
Stages : 1
Speed,rated :2000rpm
Max working pressure,allowable : 290psi
Max suction pressure,allowable : 75psi
Max brake horse power : 381-508hp

Curve No.: CNPA200017@CNPA250-200-450@2000rpm@2500→3000usgpm

The contents of this publication must not be regarded as binding. EBARA ENGINEERING SINGAPORE PTE. LTD. reserves the right to effect any modification it deems necessary, without prior notice.

PERFORMANCE CURVES - CNPAx

CNPA250-200-500

UL LISTED FM APPROVED

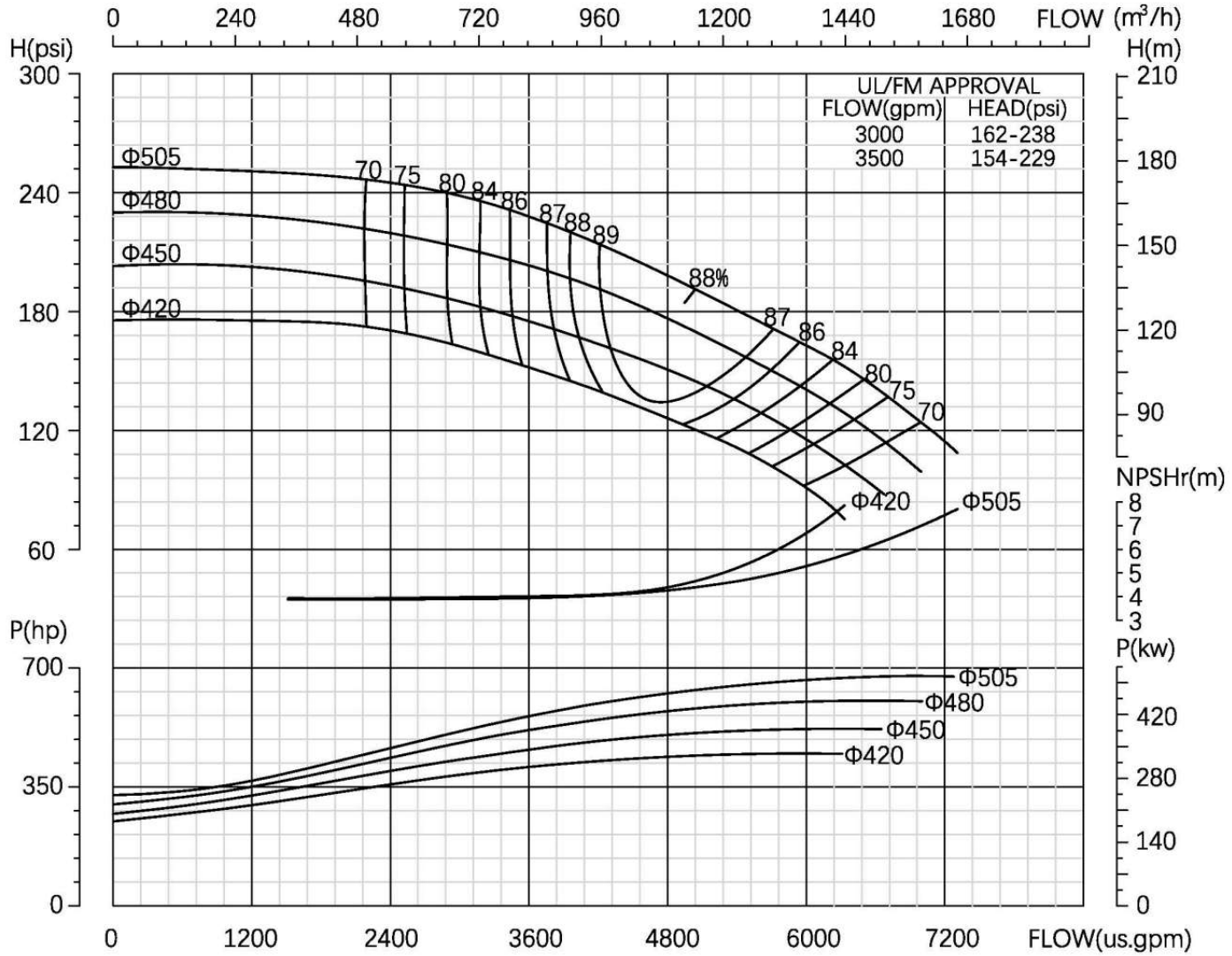

Flange rating(suction/discharge) : class 250，RF
Size : 10x8inch
Stages : 1
Speed,rated : 2000rpm
Max working pressure,allowable : 340psi
Max suction pressure,allowable : 75psi
Max brake horse power : 449-677hp

Curve No.: CNPA230018@CNPA250-200-500@2000rpm@3000→3500usgpm

The contents of this publication must not be regarded as binding. EBARA ENGINEERING SINGAPORE PTE. LTD. reserves the right to effect any modification it deems necessary, without prior notice.

PERFORMANCE CURVES - CNPAx

CNPA250-200-500S

UL LISTED FM APPROVED

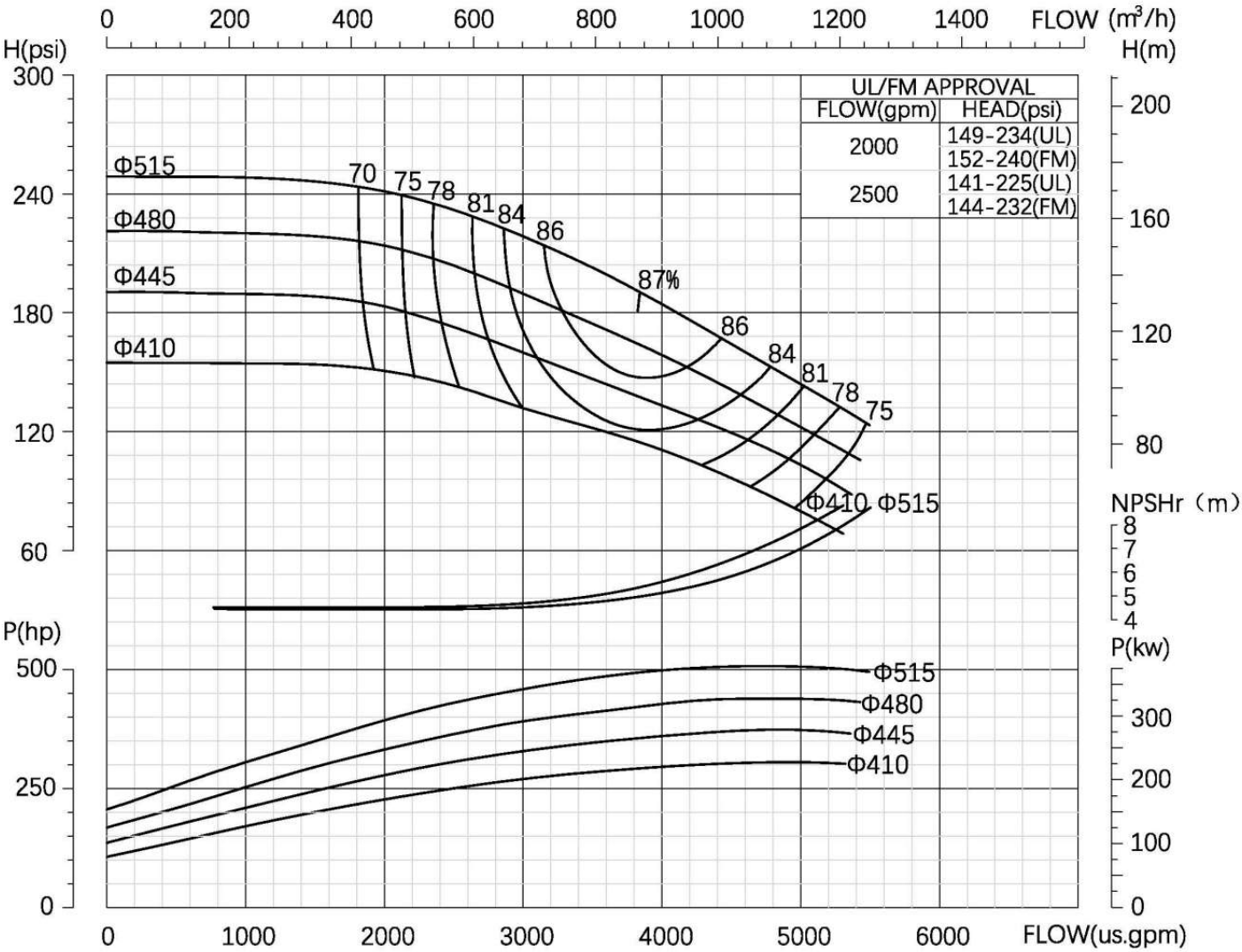

Flange rating(suction/discharge) : class 250，RF
Size : 10x8inch
Stages : 1
Speed,rated : 2000rpm
Max working pressure,allowable : 320psi
Max suction pressure,allowable : 75psi
Max brake horse power : 304-508hp

Curve No.: CNPA200019@CNPA250-200-500S@2000rpm@2000→2500usgpm

The contents of this publication must not be regarded as binding. EBARA ENGINEERING SINGAPORE PTE. LTD. reserves the right to effect any modification it deems necessary, without prior notice.

PERFORMANCE CURVES - CNPAX

CNPA125-100-330X2

UL LISTED FM APPROVED

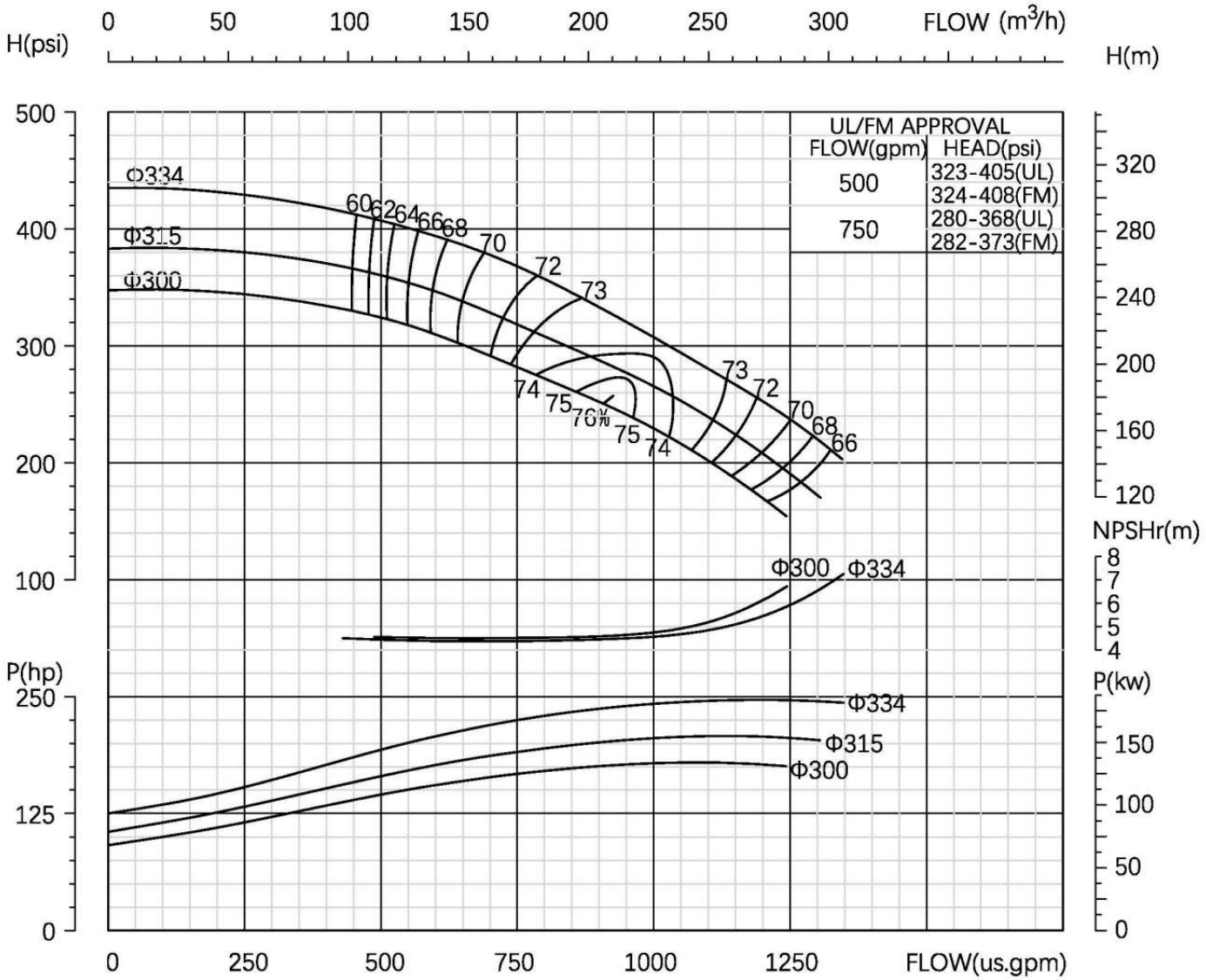

Flange rating(suction/discharge) : class 250，RF
Size : 5x4inch
Stages : 2
Frequency : 50Hz
Speed,rated : 2950rpm
Max working pressure,allowable : 580psi
Max suction pressure,allowable : 75psi
Max brake horse power : 180~245hp

Curve No.: CNPA205006@CNPA125-100-330X2@2950rpm@500→750usgpm

The contents of this publication must not be regarded as binding. EBARA ENGINEERING SINGAPORE PTE. LTD. reserves the right to effect any modification it deems necessary, without prior notice.

PERFORMANCE CURVES - CNPAX

CNPA125-100-330X2

UL LISTED FM APPROVED

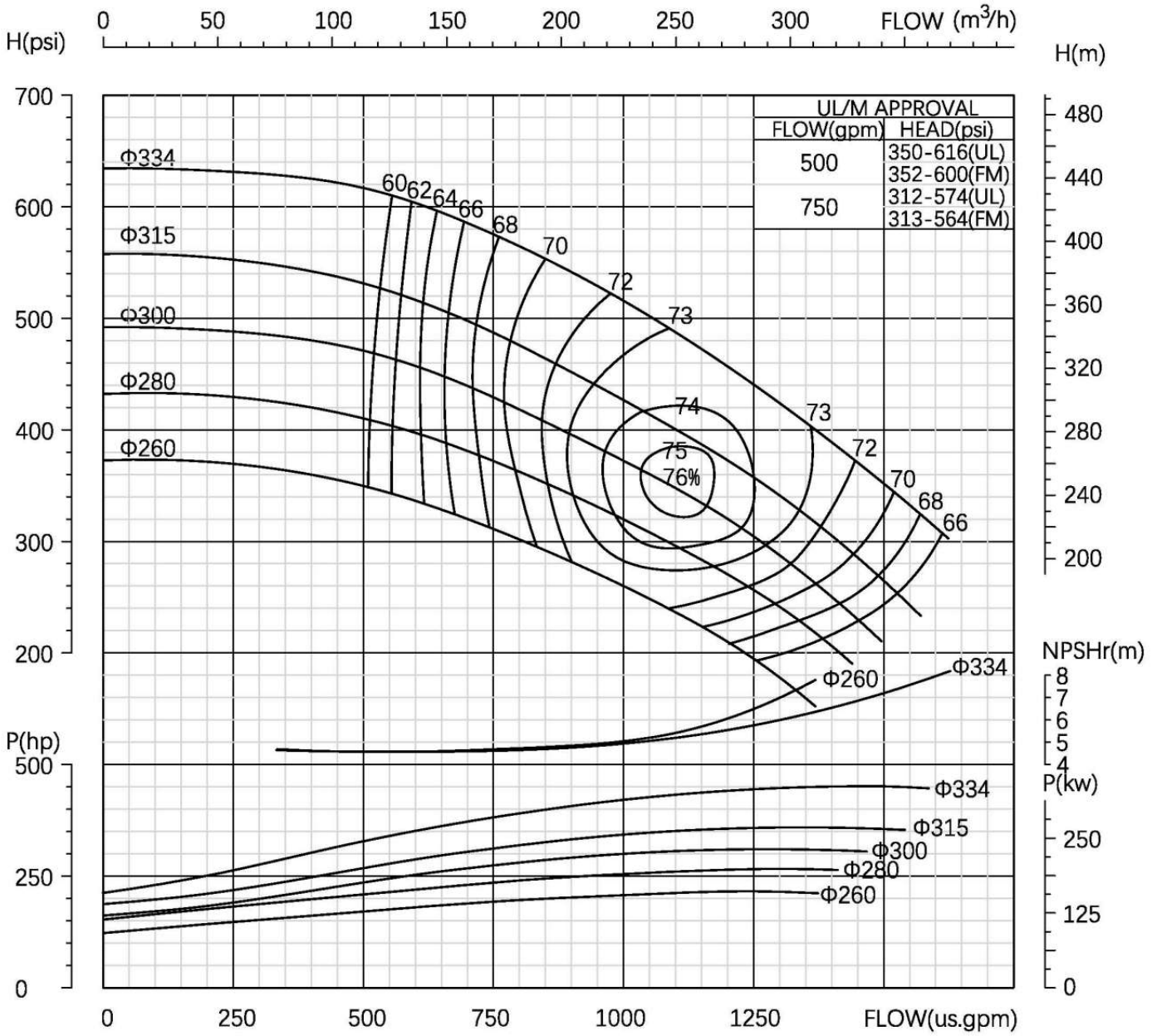

Flange rating(suction/discharge) : class 250，RF
Size : 5x4inch
Stages : 2
Frequency : 60Hz
Speed,rated : 3550rpm
Max working pressure,allowable : 708psi
Max suction pressure,allowable : 75psi
Max brake horse power : 216~450hp

Curve No.: CNPA206005@CNPA125-100-330X2@3550rpm@500→750usgpm

The contents of this publication must not be regarded as binding. EBARA ENGINEERING SINGAPORE PTE. LTD. reserves the right to effect any modification it deems necessary, without prior notice.

PERFORMANCE CURVES - CNPAX

CNPA200-150-450X2

UL LISTED FM APPROVED

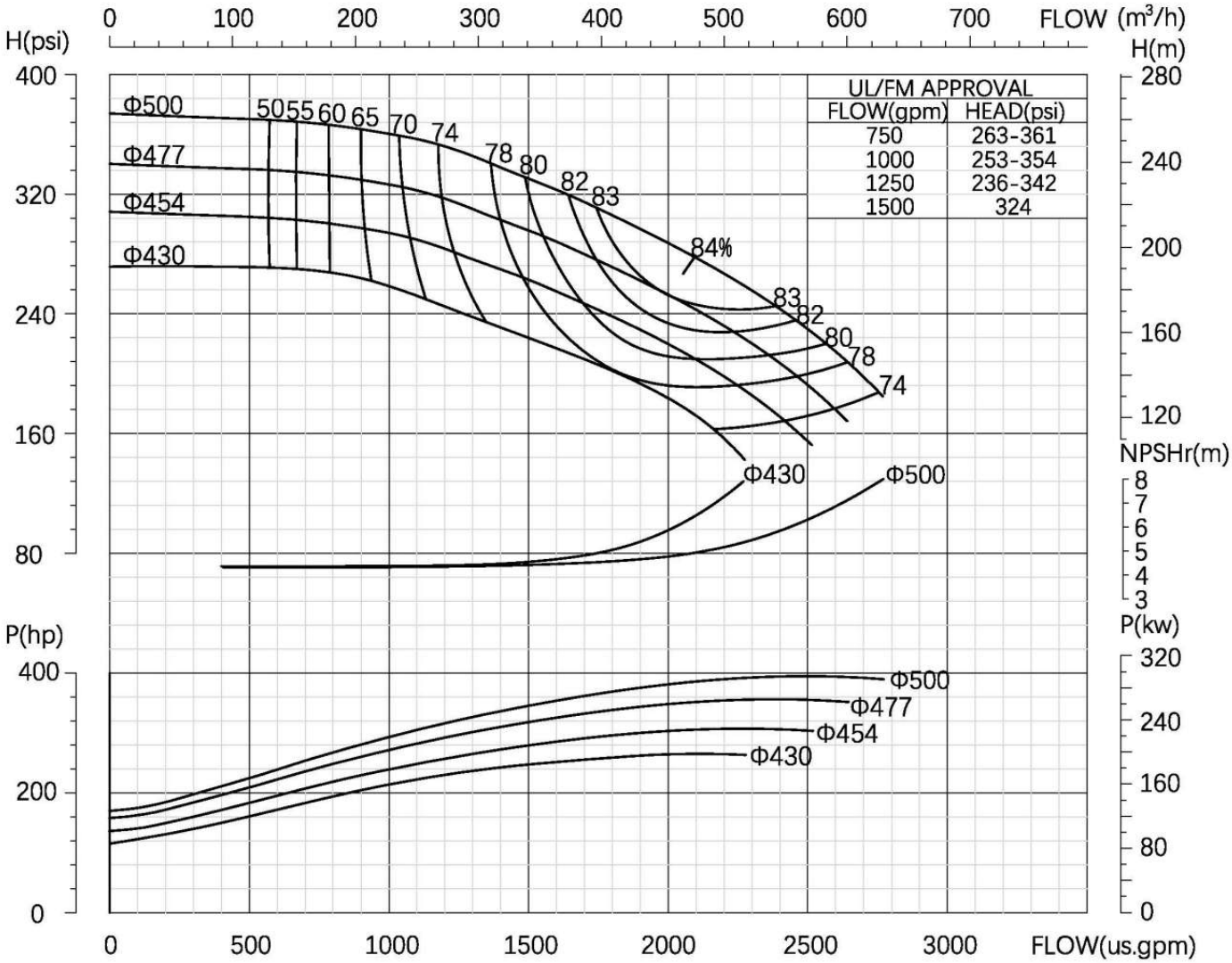

Flange rating(suction/discharge) : class 250，RF
Size : 8x6inch
Stages : 2
Frequency : 60Hz
Speed,rated : 1800rpm
Max working pressure,allowable : 450psi
Max suction pressure,allowable : 75psi
Max brake horse power : 265-395hp

Curve No.: CNPA206013@CNPA200-150-450X2@1800rpm@750→1500usgpm

The contents of this publication must not be regarded as binding. EBARA ENGINEERING SINGAPORE PTE. LTD. reserves the right to effect any modification it deems necessary, without prior notice.

OUTLINE DIMENSIONS - SINGLE STAGE

ELECTRIC MOTOR DRIVEN FIRE PUMP SETS

CNPA100-80-200

UL LISTED FM APPROVED

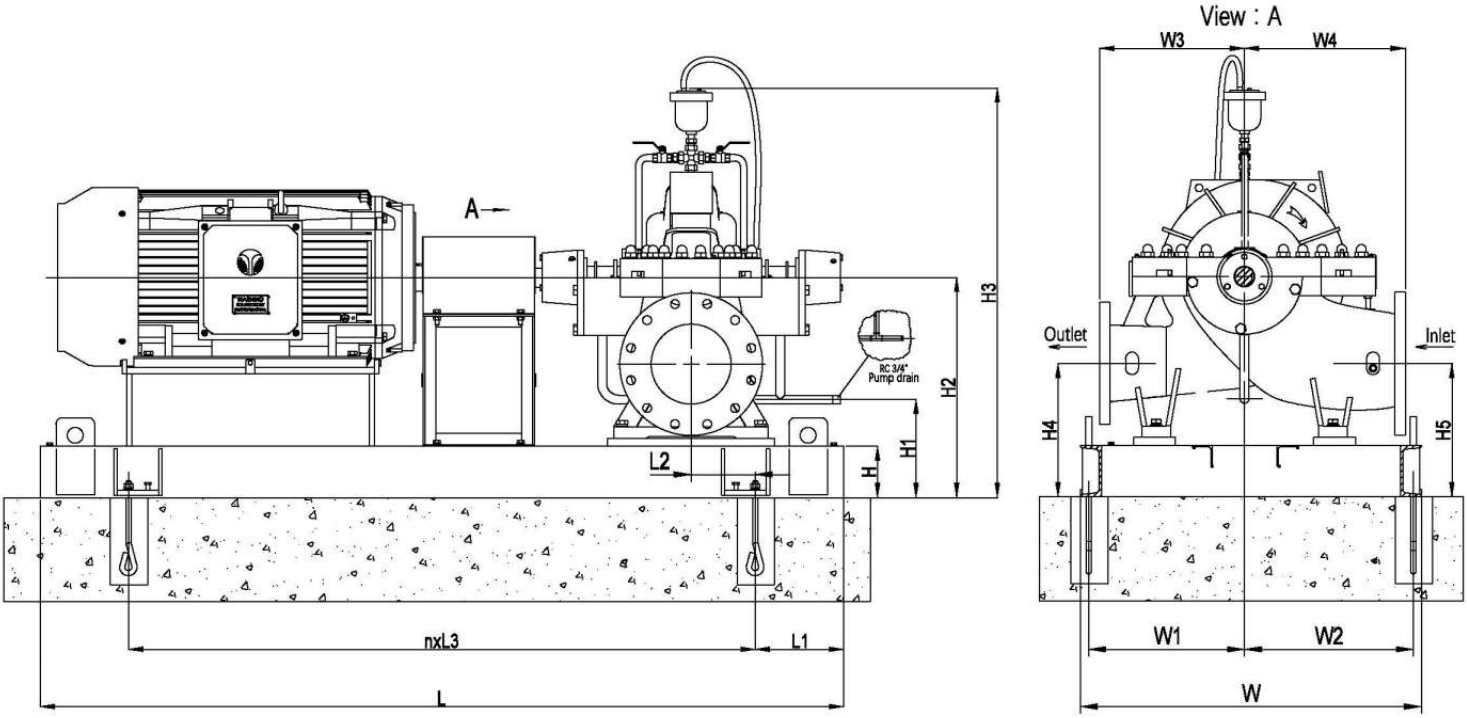

Motor model	Dimensions (Unit:mm)																Anchor bolt	Anchor bolt box
	L	L1	L2	n	L3	W	W1	W2	W3	W4	H	H1	H2	H3	H4	H5		
F-TDC286TS40U2B	1300	250	60	1	800	650	325	275	230	270	120	170	410	860	280	280	4-M16x300	4-120x120x300
F-TXC324TS40U2B	1450	275	35	1	900	650	325	275	230	270	120	170	410	860	280	280	4-M16x300	4-120x120x300
F-TDC324TS50U2B	1400	250	60	1	900	700	325	325	230	270	120	170	410	860	280	280	4-M16x300	4-120x120x300
F-TXC326TS50U2B	1450	275	35	1	900	650	325	275	230	270	120	170	410	860	280	280	4-M16x300	4-120x120x300
F-TDC326TS60U2B	1400	250	60	1	900	700	325	325	230	270	120	170	410	860	280	280	4-M16x300	4-120x120x300
F-TXC364TS60U2B	1500	275	35	1	950	750	275	425	230	270	120	170	410	860	280	280	4-M16x300	4-120x120x300
F-TDC365TS75U2B	1400	250	60	1	900	750	275	425	230	270	120	170	410	860	280	280	4-M16x300	4-120x120x300
F-TXC365TS75U2B	1500	275	35	1	950	750	275	425	230	270	120	170	410	860	280	280	4-M16x300	4-120x120x300

The force and torque of the pipe

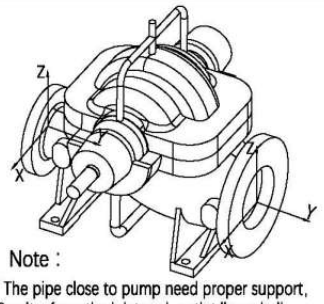

Note :

The pipe close to pump need proper support, Gravity from the inlet and outlet lines shall not be borne by the pump。

Pump Flange	Unit	Axial Direction		
		Fx	Fy	Fz
Inlet (4 INCH)	Pound	320	400	260
Outlet (3 INCH)	Pound	240	300	200
Inlet (DN 100)	Newton	1420	1780	1160
Outlet (DN 80)	Newton	1070	1330	890
Pump Flange	**Unit**	**Axial Direction**		
		Mx	My	Mz
Inlet (4 INCH)	Pound-Feet	980	500	740
Outlet (3 INCH)	Pound-Feet	700	350	530
Inlet (DN 150)	Newton-meter	1330	680	1000
Outlet (DN 80)	Newton-meter	950	470	720

Flange specification

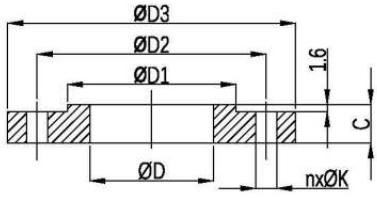

ANSI B16.1 250 Lb RF	ØD	ØD1	ØD2	ØD3	n	ØK	C
Inlet 4 INCH	101.5	176.3	200.1	254.0	8	22.3	31.7
Outlet 3 INCH	76.2	144.5	168.1	209.1	8	22.3	28.4

NOTE : ALL DIMENSIONS AND WEIGHTS ARE PRELIMINARY NOT FOR CONSTRUCTION USE. CERTIFIED AS BUILT DRAWINGS ARE AVAILABLE UPON REQUEST.

The contents of this publication must not be regarded as binding. EBARA ENGINEERING SINGAPORE PTE. LTD. reserves the right to effect any modification it deems necessary, without prior notice.

OUTLINE DIMENSIONS - SINGLE STAGE

ELECTRIC MOTOR DRIVEN FIRE PUMP SETS

CNPA100-80-250

UL LISTED FM APPROVED

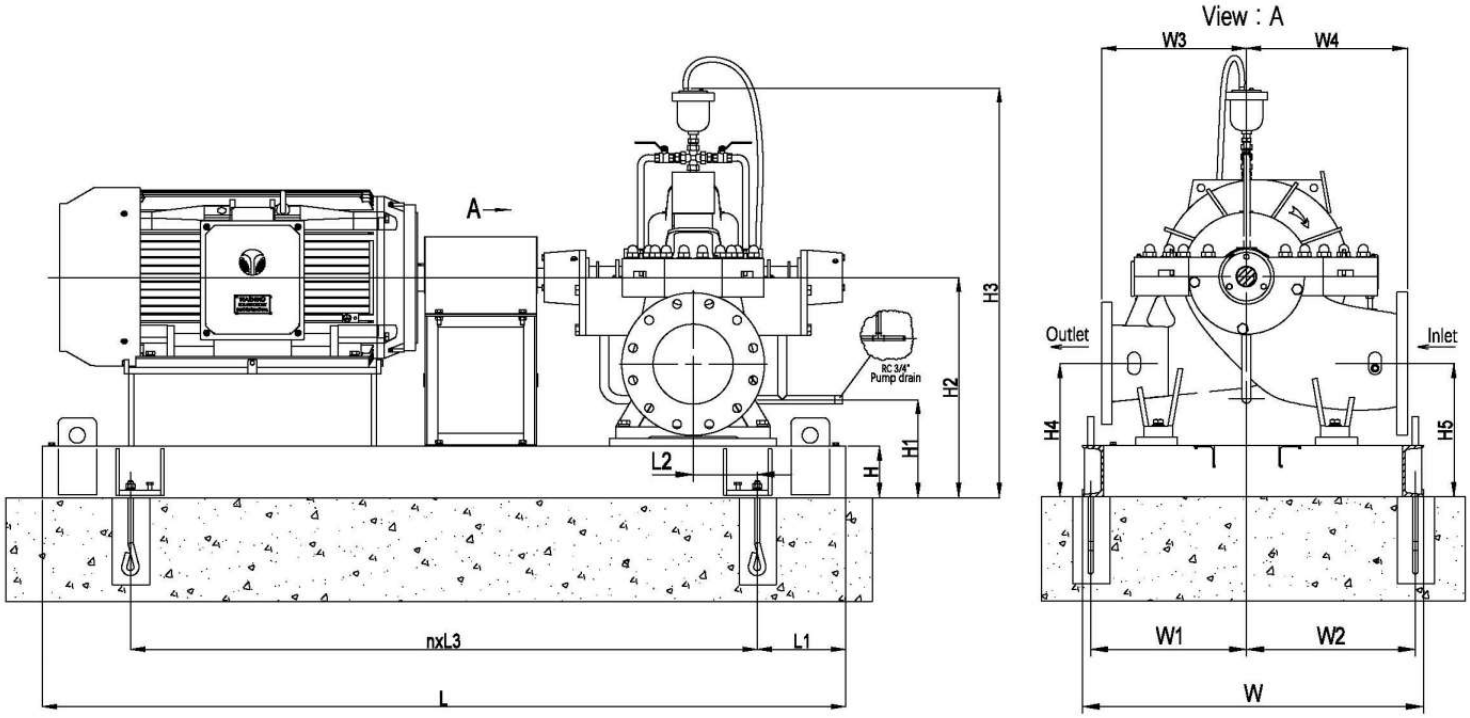

Motor model	Dimensions (Unit:mm)																Anchor bolt	Anchor bolt box
	L	L1	L2	n	L3	W	W1	W2	W3	W4	H	H1	H2	H3	H4	H5		
F-TDC286TS40U2B	1300	250	60	1	800	650	325	275	250	280	120	210	450	920	280	280	4-M16x300	4-120x120x300
F-TXC324TS40U2B	1450	275	35	1	900	650	325	275	250	280	120	210	450	920	280	280	4-M16x300	4-120x120x300
F-TDC324TS50U2B	1400	250	60	1	900	700	325	325	250	280	120	210	450	920	280	280	4-M16x300	4-120x120x300
F-TXC326TS50U2B	1450	275	35	1	900	650	325	275	250	280	120	210	450	920	280	280	4-M16x300	4-120x120x300
F-TDC326TS60U2B	1400	250	60	1	900	700	325	325	250	280	120	210	450	920	280	280	4-M16x300	4-120x120x300
F-TXC364TS60U2B	1500	275	35	1	950	750	275	425	250	280	120	210	450	920	280	280	4-M16x300	4-120x120x300
F-TDC365TS75U2B	1400	250	60	1	900	750	275	425	250	280	120	210	450	920	280	280	4-M16x300	4-120x120x300
F-TXC365TS75U2B	1500	275	35	1	950	750	275	425	250	280	120	210	450	920	280	280	4-M16x300	4-120x120x300
F-TDC365TS100U2B	1400	250	60	1	900	750	275	425	250	280	120	210	450	920	280	280	4-M16x300	4-120x120x300
F-TXC405TS100U2B	1600	150	160	2	650	800	275	475	250	280	120	210	450	920	280	280	6-M16x300	6-120x120x300

The force and torque of the pipe

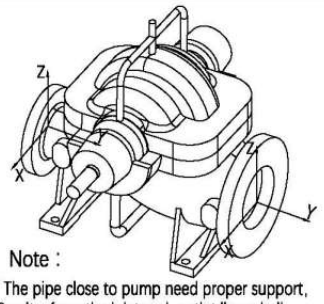

Note :

The pipe close to pump need proper support, Gravity from the inlet and outlet lines shall not be borne by the pump。

Pump Flange	Unit	Axial Direction		
		Fx	Fy	Fz
Inlet (4 INCH)	Pound	320	400	260
Outlet (3 INCH)	Pound	240	300	200
Inlet (DN 100)	Newton	1420	1780	1160
Outlet (DN 80)	Newton	1070	1330	890
Pump Flange	Unit	Axial Direction		
		Mx	My	Mz
Inlet (4 INCH)	Pound-Feet	980	500	740
Outlet (3 INCH)	Pound-Feet	700	350	530
Inlet (DN 150)	Newton-meter	1330	680	1000
Outlet (DN 80)	Newton-meter	950	470	720

Flange specification

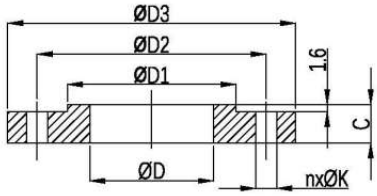

ANSI B16.1 250 Lb RF	ØD	ØD1	ØD2	ØD3	n	ØK	C
Inlet 4 INCH	101.5	176.3	200.1	254.0	8	22.3	31.7
Outlet 3 INCH	76.2	144.5	168.1	209.1	8	22.3	28.4

NOTE : ALL DIMENSIONS AND WEIGHTS ARE PRELIMINARY NOT FOR CONSTRUCTION USE. CERTIFIED AS BUILT DRAWINGS ARE AVAILABLE UPON REQUEST.

The contents of this publication must not be regarded as binding. EBARA ENGINEERING SINGAPORE PTE. LTD. reserves the right to effect any modification it deems necessary, without prior notice.

OUTLINE DIMENSIONS - SINGLE STAGE

ELECTRIC MOTOR DRIVEN FIRE PUMP SETS

CNPA125-80-200

UL LISTED FM APPROVED

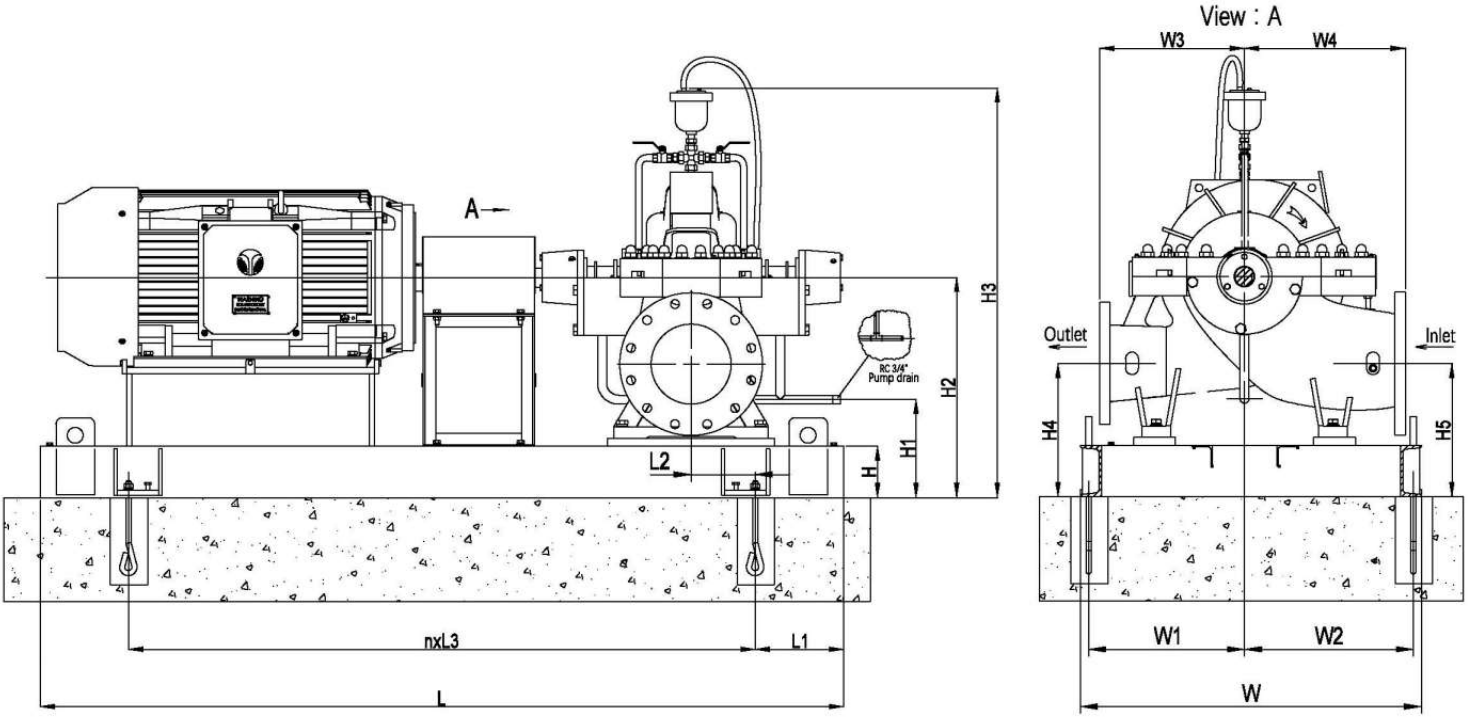

Motor model	Dimensions (Unit:mm)																Anchor bolt	Anchor bolt box
	L	L1	L2	n	L3	W	W1	W2	W3	W4	H	H1	H2	H3	H4	H5		
F-TDC286TS30U2B	1300	250	70	1	800	700	325	325	250	270	120	215	455	879	330	305	4-M16x300	4-120x120x300
F-TXC286TS30U2B	1400	250	70	1	900	700	325	325	250	270	120	215	455	879	330	305	4-M16x300	4-120x120x300
F-TDC286TS40U2B	1300	250	70	1	800	700	325	325	250	270	120	215	455	879	330	305	4-M16x300	4-120x120x300
F-TXC324TS40U2B	1450	275	45	1	900	700	325	325	250	270	120	215	455	879	330	305	4-M16x300	4-120x120x300
F-TDC324TS50U2B	1400	250	70	1	900	700	275	375	250	270	120	215	455	879	330	305	4-M16x300	4-120x120x300
F-TXC326TS50U2B	1500	300	20	1	900	700	325	325	250	270	120	215	455	879	330	305	4-M16x300	4-120x120x300
F-TDC326TS60U2B	1400	250	70	1	900	700	275	375	250	270	120	215	455	879	330	305	4-M16x300	4-120x120x300
F-TXC364TS60U2B	1500	300	20	1	900	700	275	375	250	270	120	215	455	879	330	305	4-M16x300	4-120x120x300
F-TDC365TS75U2B	1400	250	70	1	900	750	325	375	250	270	120	215	455	879	330	305	4-M16x300	4-120x120x300
F-TXC365TS75U2B	1500	300	20	1	900	700	275	375	250	270	120	215	455	879	330	305	4-M16x300	4-120x120x300

The force and torque of the pipe

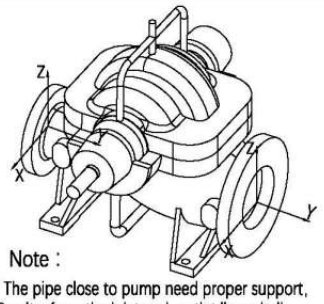

Note :

The pipe close to pump need proper support, Gravity from the inlet and outlet lines shall not be borne by the pump。

Pump Flange	Unit	Axial Direction		
		Fx	Fy	Fz
Inlet (5 INCH)	Pound	560	700	460
Outlet (3 INCH)	Pound	240	300	200
Inlet (DN 125)	Newton	2490	3110	2050
Outlet (DN 80)	Newton	1070	1330	890
Pump Flange	Unit	Axial Direction		
		Mx	My	Mz
Inlet (5 INCH)	Pound-Feet	1700	870	1300
Outlet (3 INCH)	Pound-Feet	700	350	530
Inlet (DN 125)	Newton-meter	2300	1180	1760
Outlet (DN 80)	Newton-meter	950	470	720

Flange specification

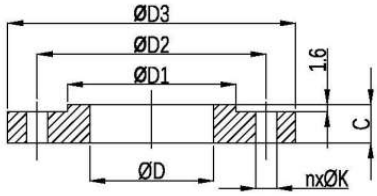

ANSI B16.1 250 Lb RF	ØD	ØD1	ØD2	ØD3	n	ØK	C
Inlet 5 INCH	128.3	211.0	234.9	279.4	8	22.3	35.0
Outlet 3 INCH	76.2	144.5	168.1	209.1	8	22.3	28.4

NOTE : ALL DIMENSIONS AND WEIGHTS ARE PRELIMINARY NOT FOR CONSTRUCTION USE. CERTIFIED AS BUILT DRAWINGS ARE AVAILABLE UPON REQUEST.

The contents of this publication must not be regarded as binding. EBARA ENGINEERING SINGAPORE PTE. LTD. reserves the right to effect any modification it deems necessary, without prior notice.

OUTLINE DIMENSIONS - SINGLE STAGE

ELECTRIC MOTOR DRIVEN FIRE PUMP SETS

CNPA125-80-250

UL LISTED FM APPROVED

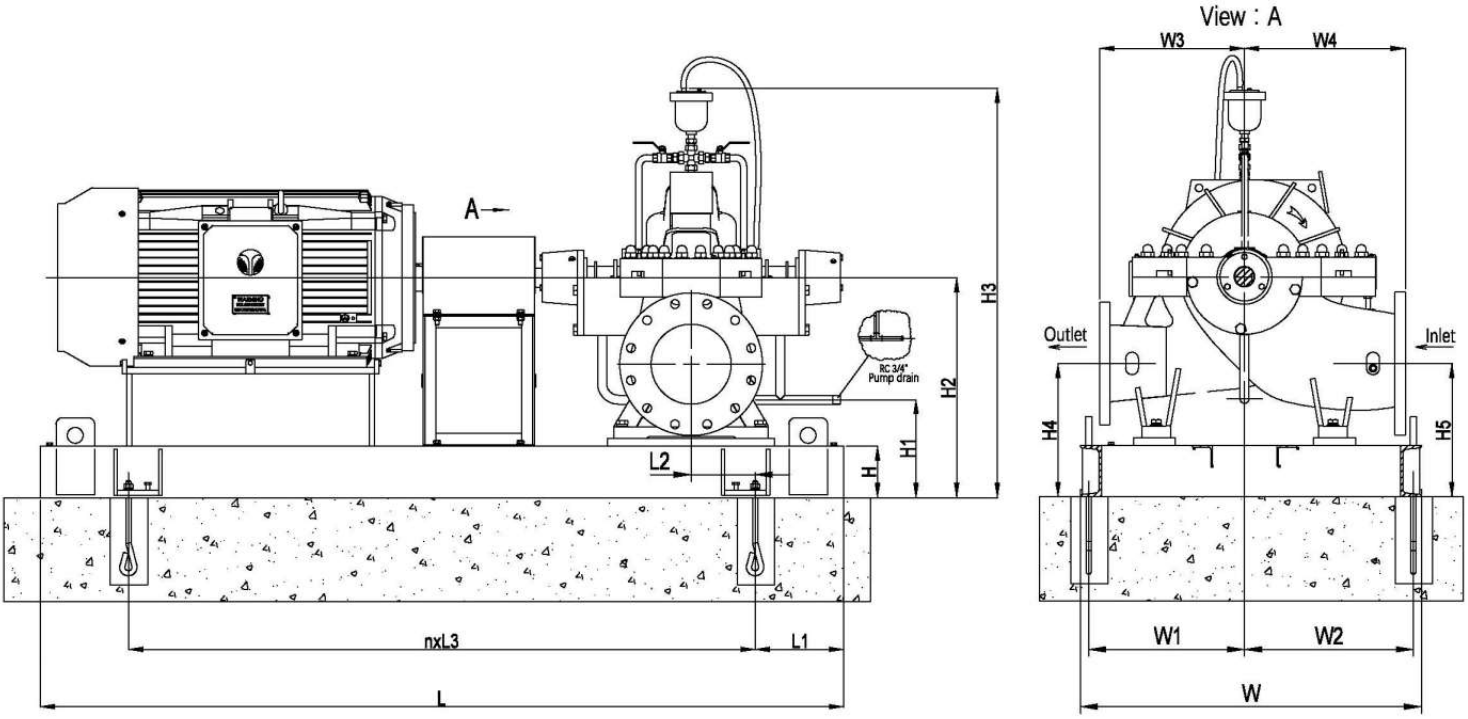

Motor model	Dimensions (Unit:mm)																Anchor bolt	Anchor bolt box
	L	L1	L2	n	L3	W	W1	W2	W3	W4	H	H1	H2	H3	H4	H5		
F-TDC286TS40U2B	1600	150	230	2	650	700	285	365	250	330	120	180	455	875	295	295	6-M16x300	6-120x120x300
F-TXC324TS40U2B	1600	150	230	2	650	700	285	365	250	330	120	180	455	875	295	295	6-M16x300	6-120x120x300
F-TDC324TS50U2B	1600	150	230	2	650	700	285	365	250	330	120	180	455	875	295	295	6-M16x300	6-120x120x300
F-TXC326TS50U2B	1600	150	230	2	650	700	285	365	250	330	120	180	455	875	295	295	6-M16x300	6-120x120x300
F-TDC326TS60U2B	1600	150	230	2	650	700	310	340	250	330	120	180	455	875	295	295	6-M16x300	6-120x120x300
F-TXC364TS60U2B	1700	150	230	2	700	800	335	415	250	330	120	180	455	875	295	295	6-M16x300	6-120x120x300
F-TDC365TS75U2B	1600	150	230	2	650	800	375	375	250	330	120	180	455	875	295	295	6-M16x300	6-120x120x300
F-TXC365TS75U2B	1700	150	230	2	700	800	335	415	250	330	120	180	455	875	295	295	6-M16x300	6-120x120x300
F-TDC365TS100U2B	1600	150	230	2	650	800	335	415	250	330	120	180	455	875	295	295	6-M16x300	6-120x120x300
F-TXC405TS100U2B	1800	150	230	2	750	800	335	415	250	330	140	200	475	895	315	315	6-M16x300	6-120x120x300
F-TDC404TS125U2B	1700	200	180	2	650	800	335	415	250	330	140	200	475	895	315	315	6-M16x300	6-120x120x300
F-TXC444TS125U2B	1800	150	230	2	750	900	375	475	250	330	140	200	475	895	315	315	6-M16x300	6-120x120x300

The force and torque of the pipe

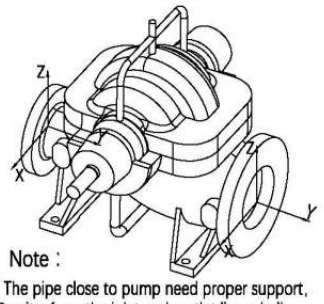

Note :

The pipe close to pump need proper support, Gravity from the inlet and outlet lines shall not be borne by the pump。

Pump Flange	Unit	Axial Direction		
		Fx	Fy	Fz
Inlet (5 INCH)	Pound	560	700	460
Outlet (3 INCH)	Pound	240	300	200
Inlet (DN 125)	Newton	2490	3110	2050
Outlet (DN 80)	Newton	1070	1330	890
Pump Flange	Unit	Axial Direction		
		Mx	My	Mz
Inlet (5 INCH)	Pound-Feet	1700	870	1300
Outlet (3 INCH)	Pound-Feet	700	350	530
Inlet (DN 125)	Newton-meter	2300	1180	1760
Outlet (DN 80)	Newton-meter	950	470	720

Flange specification

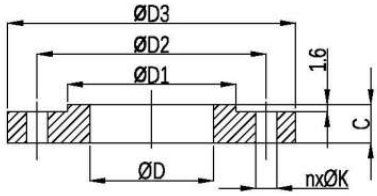

ANSI B16.1 250 Lb RF	ØD	ØD1	ØD2	ØD3	n	ØK	C
Inlet 5 INCH	128.3	211.0	234.9	279.4	8	22.3	35.0
Outlet 3 INCH	76.2	144.5	168.1	209.1	8	22.3	28.4

NOTE : ALL DIMENSIONS AND WEIGHTS ARE PRELIMINARY NOT FOR CONSTRUCTION USE. CERTIFIED AS BUILT DRAWINGS ARE AVAILABLE UPON REQUEST.

The contents of this publication must not be regarded as binding. EBARA ENGINEERING SINGAPORE PTE. LTD. reserves the right to effect any modification it deems necessary, without prior notice.

OUTLINE DIMENSIONS - SINGLE STAGE

ELECTRIC MOTOR DRIVEN FIRE PUMP SETS

CNPA125-80-350

UL LISTED FM APPROVED

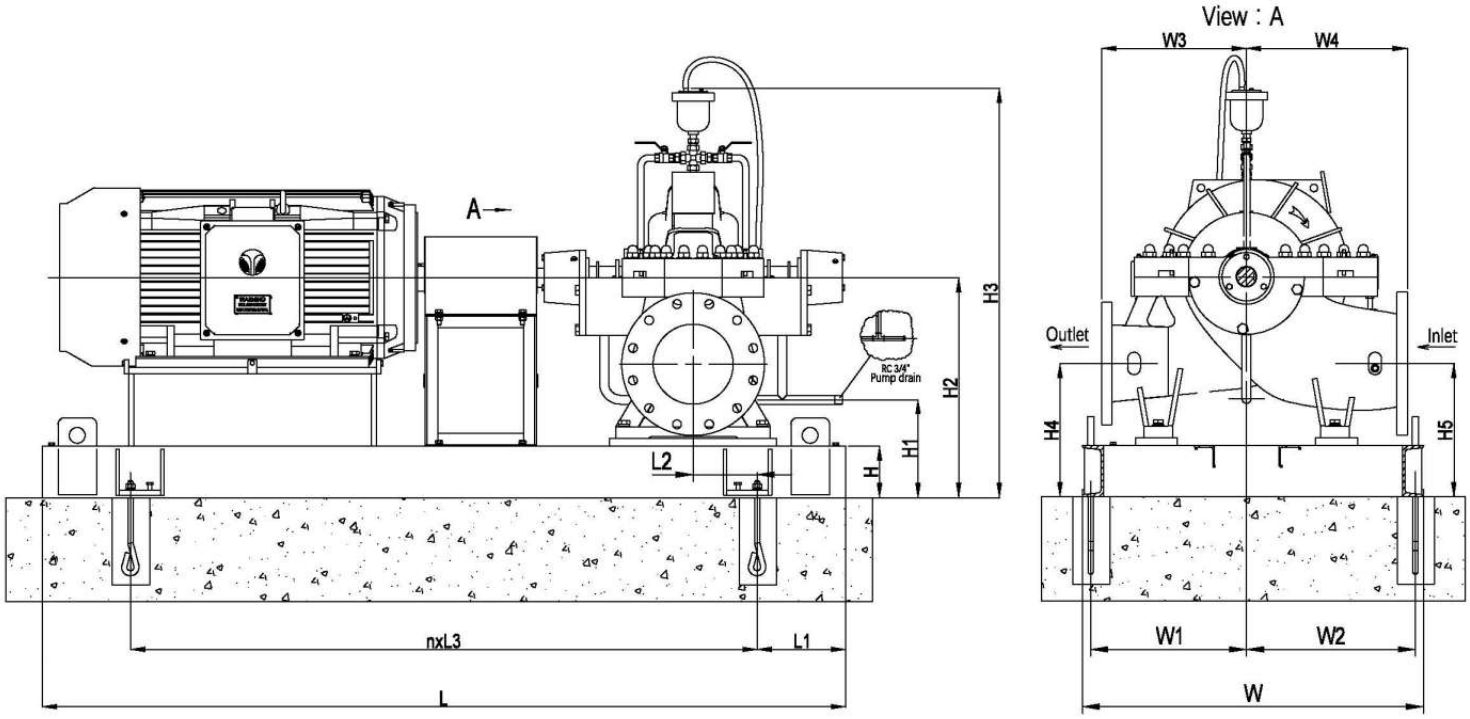

Motor model	Dimensions (Unit:mm)																Anchor bolt	Anchor bolt box
	L	L1	L2	n	L3	W	W1	W2	W3	W4	H	H1	H2	H3	H4	H5		
F-TDC365TS100U2B	1600	150	220	2	650	800	365	385	330	360	120	220	470	995	290	290	6-M16x300	6-120x120x300
F-TXC405TS100U2B	1800	150	220	2	750	850	365	435	330	360	120	220	470	995	290	290	6-M16x300	6-120x120x300
F-TDC404TS125U2B	1700	150	220	2	700	800	340	410	330	360	120	220	470	995	290	290	6-M16x300	6-120x120x300
F-TXC444TS125U2B	1850	175	195	2	750	850	340	460	330	360	140	240	490	1015	310	310	6-M16x300	6-120x120x300
F-TDC405TS150U2B	1700	150	220	2	700	800	340	410	330	360	140	240	490	1015	310	310	6-M16x300	6-120x120x300
F-TXC445TS150U2B	1850	175	195	2	750	850	340	460	330	360	140	240	490	1015	310	310	6-M16x300	6-120x120x300
F-TDC444TS200U2B	1850	175	195	2	750	850	360	440	330	360	140	240	490	1015	310	310	6-M16x300	6-120x120x300
F-TXC447TS200U2B	2150	160	210	3	610	900	360	490	330	360	140	240	490	1015	310	310	8-M16x300	8-120x120x300
F-TDC449TS250U2B	2050	225	145	2	800	850	340	460	330	360	140	240	490	1015	310	310	6-M16x300	6-120x120x300
F-TXC449TS250U2B	2150	160	210	3	610	900	360	490	330	360	140	240	490	1015	310	310	8-M16x300	8-120x120x300

The force and torque of the pipe

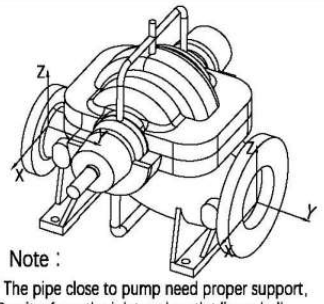

Note :

The pipe close to pump need proper support, Gravity from the inlet and outlet lines shall not be borne by the pump。

Pump Flange	Unit	Axial Direction		
		Fx	Fy	Fz
Inlet (5 INCH)	Pound	560	700	460
Outlet (3 INCH)	Pound	240	300	200
Inlet (DN 125)	Newton	2490	3110	2050
Outlet (DN 80)	Newton	1070	1330	890
Pump Flange	**Unit**	**Axial Direction**		
		Mx	My	Mz
Inlet (5 INCH)	Pound-Feet	1700	870	1300
Outlet (3 INCH)	Pound-Feet	700	350	530
Inlet (DN 125)	Newton-meter	2300	1180	1760
Outlet (DN 80)	Newton-meter	950	470	720

Flange specification

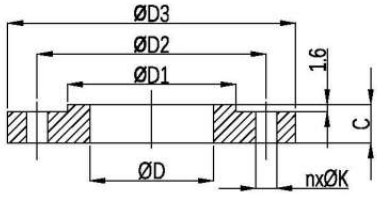

ANSI B16.1 250 Lb RF	ØD	ØD1	ØD2	ØD3	n	ØK	C
Inlet 5 INCH	128.3	211.0	234.9	279.4	8	22.3	35.0
Outlet 3 INCH	76.2	144.5	168.1	209.1	8	22.3	28.4

NOTE : ALL DIMENSIONS AND WEIGHTS ARE PRELIMINARY NOT FOR CONSTRUCTION USE. CERTIFIED AS BUILT DRAWINGS ARE AVAILABLE UPON REQUEST.

The contents of this publication must not be regarded as binding. EBARA ENGINEERING SINGAPORE PTE. LTD. reserves the right to effect any modification it deems necessary, without prior notice.

OUTLINE DIMENSIONS - SINGLE STAGE

ELECTRIC MOTOR DRIVEN FIRE PUMP SETS

CNPA125-100-300

UL LISTED FM APPROVED

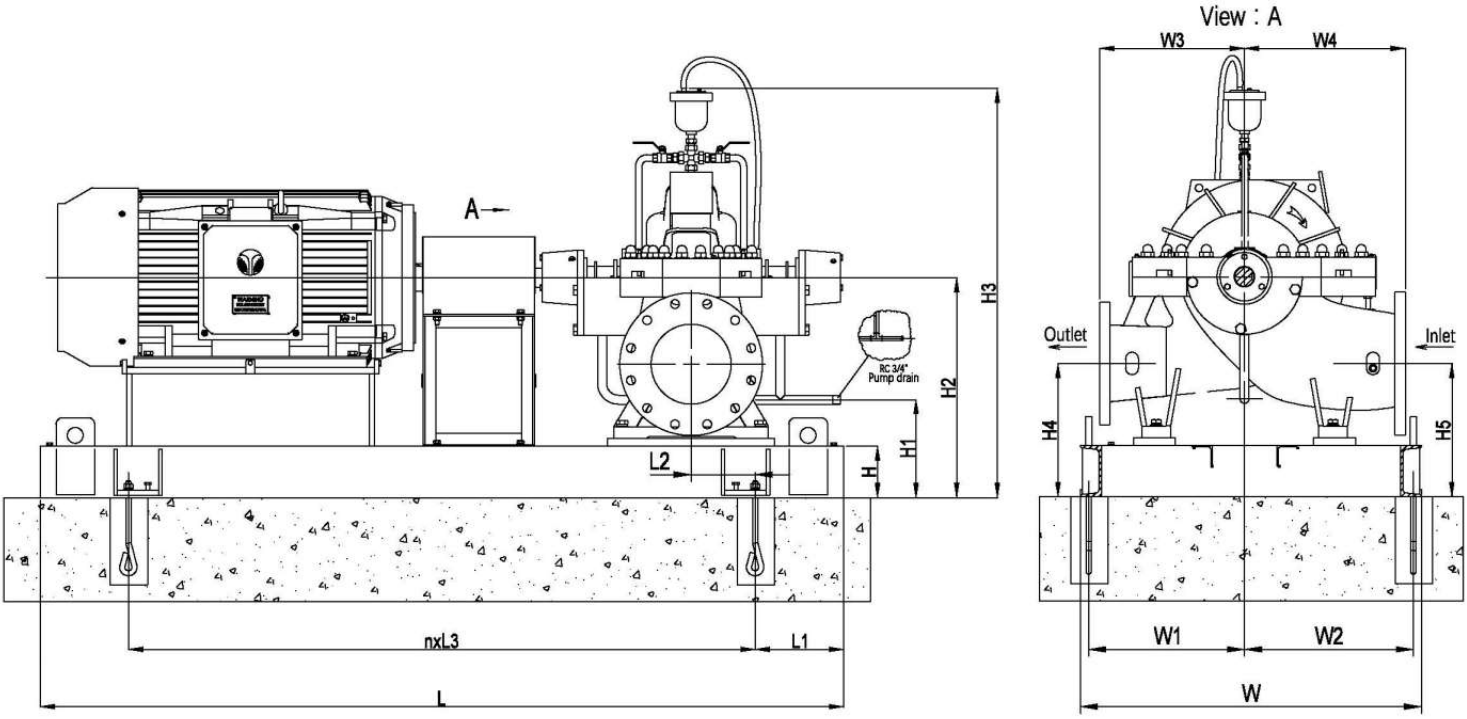

Motor model	Dimensions (Unit:mm)																Anchor bolt	Anchor bolt box
	L	L1	L2	n	L3	W	W1	W2	W3	W4	H	H1	H2	H3	H4	H5		
F-TDC365TS75U2B	1600	150	230	2	650	800	365	385	290	330	140	190	475	925	305	305	6-M16x300	6-120x120x300
F-TXC365TS75U2B	1700	150	250	2	700	800	365	385	290	330	140	190	475	925	305	305	6-M16x300	6-120x120x300
F-TDC365TS100U2B	1600	150	230	2	650	800	365	385	290	330	140	190	475	925	305	305	6-M16x300	6-120x120x300
F-TXC405TS100U2B	1800	150	230	2	750	800	335	415	290	330	140	190	475	925	305	305	6-M16x300	6-120x120x300
F-TDC404TS125U2B	1700	150	230	2	700	800	315	435	290	330	140	190	475	925	305	305	6-M16x300	6-120x120x300
F-TXC444TS125U2B	1850	175	205	2	750	850	340	460	290	330	140	190	475	925	305	305	6-M16x300	6-120x120x300
F-TDC405TS150U2B	1700	150	230	2	700	800	315	435	290	330	140	190	475	925	305	305	6-M16x300	6-120x120x300
F-TXC445TS150U2B	1850	175	205	2	750	850	340	460	290	330	140	190	475	925	305	305	6-M16x300	6-120x120x300
F-TDC444TS200U2B	1850	175	205	2	750	850	360	440	290	330	140	190	475	925	305	305	6-M16x300	6-120x120x300
F-TXC447TS200U2B	2150	160	220	3	610	900	360	490	290	330	140	190	475	925	305	305	8-M16x300	8-120x120x300

The force and torque of the pipe

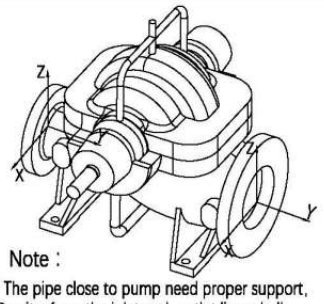

Note :

The pipe close to pump need proper support, Gravity from the inlet and outlet lines shall not be borne by the pump。

Pump Flange	Unit	Axial Direction		
		Fx	Fy	Fz
Inlet (5 INCH)	Pound	560	700	460
Outlet (4 INCH)	Pound	320	400	260
Inlet (DN 125)	Newton	2490	3110	2050
Outlet (DN 100)	Newton	1420	1780	1160
Pump Flange	**Unit**	**Axial Direction**		
		Mx	My	Mz
Inlet (5 INCH)	Pound-Feet	1700	870	1300
Outlet (4 INCH)	Pound-Feet	980	500	740
Inlet (DN 125)	Newton-meter	2300	1180	1760
Outlet (DN 100)	Newton-meter	1330	680	1000

Flange specification

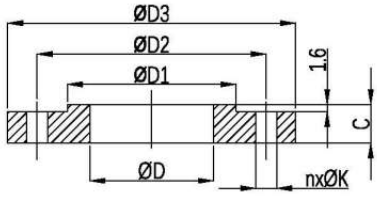

ANSI B16.1 250 Lb RF	ØD	ØD1	ØD2	ØD3	n	ØK	C
Inlet 5 INCH	128.3	211.0	234.9	279.4	8	22.3	35.0
Outlet 4 INCH	102.4	176.3	200.1	254.0	8	22.3	31.7

NOTE : ALL DIMENSIONS AND WEIGHTS ARE PRELIMINARY NOT FOR CONSTRUCTION USE. CERTIFIED AS BUILT DRAWINGS ARE AVAILABLE UPON REQUEST.

The contents of this publication must not be regarded as binding. EBARA ENGINEERING SINGAPORE PTE. LTD. reserves the right to effect any modification it deems necessary, without prior notice.

OUTLINE DIMENSIONS - SINGLE STAGE

ELECTRIC MOTOR DRIVEN FIRE PUMP SETS

CNPA150-125-200

UL LISTED FM APPROVED

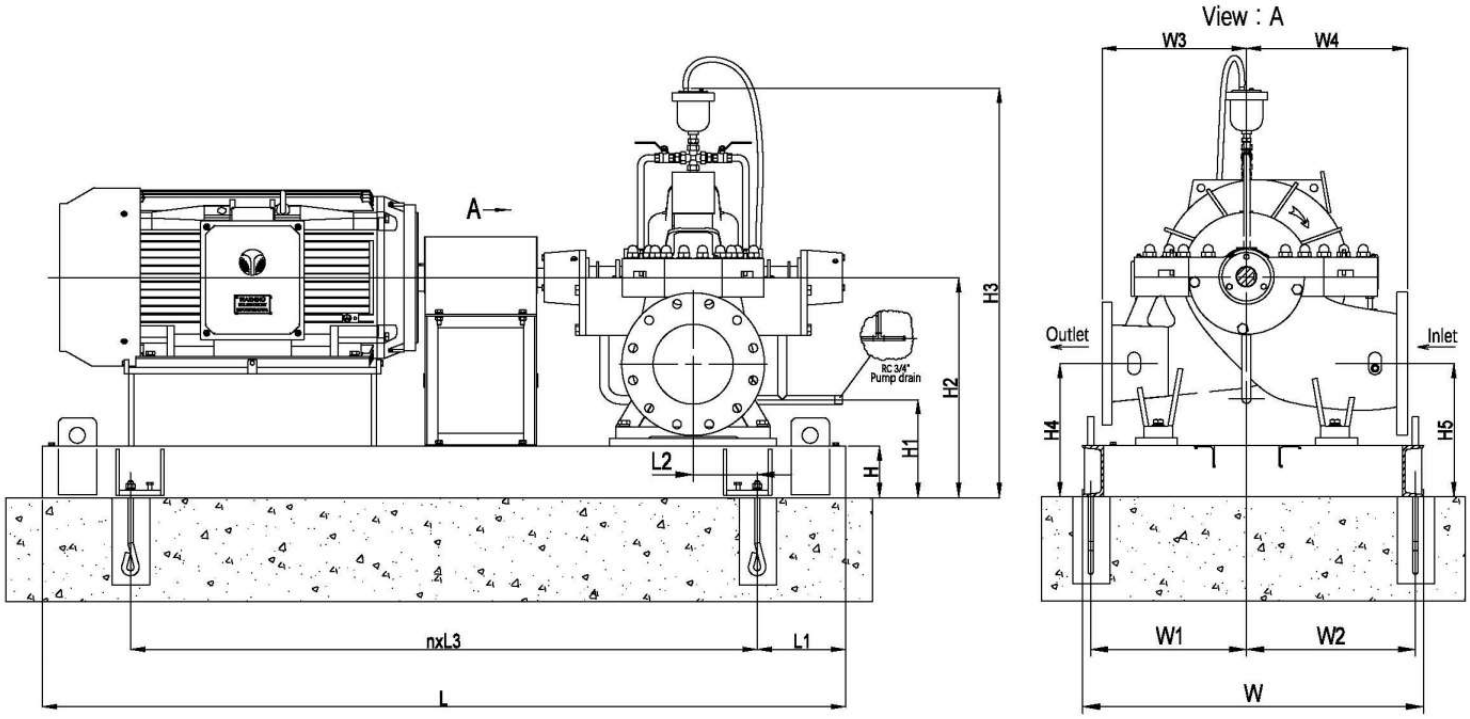

Motor model	Dimensions (Unit:mm)																Anchor bolt	Anchor bolt box
	L	L1	L2	n	L3	W	W1	W2	W3	W4	H	H1	H2	H3	H4	H5		
F-TDC364TS75U2B	1600	200	170	2	600	800	375	375	290	310	120	220	540	1000	340	340	6-M16x300	6-120x120x300
F-TXC365TS75U2B	1800	150	250	2	700	800	350	400	290	310	120	220	540	1000	340	340	6-M16x300	6-120x120x300
F-TDC365TS100U2B	1600	200	170	2	600	800	375	375	290	310	120	220	540	1000	340	340	6-M16x300	6-120x120x300
F-TXC405TS100U2B	1800	150	230	2	750	800	350	400	290	310	140	240	560	1020	360	360	6-M16x300	6-120x120x300
F-TDC404TS125U2B	1800	150	230	2	750	800	350	400	290	310	140	245	565	1025	365	365	6-M16x300	6-120x120x300
F-TXC444TS125U2B	1900	150	230	2	800	900	350	500	290	310	140	240	560	1020	360	360	6-M16x300	6-120x120x300

The force and torque of the pipe

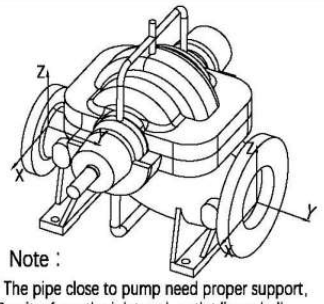

Note :

The pipe close to pump need proper support, Gravity from the inlet and outlet lines shall not be borne by the pump。

Pump Flange	Unit	Axial Direction		
		Fx	Fy	Fz
Inlet (6 INCH)	Pound	560	700	460
Outlet (5 INCH)	Pound	560	700	460
Inlet (DN 150)	Newton	2490	3110	2050
Outlet (DN 125)	Newton	2490	3110	2050
Pump Flange	Unit	Axial Direction		
		Mx	My	Mz
Inlet (6 INCH)	Pound-Feet	1700	870	1300
Outlet (5 INCH)	Pound-Feet	1700	870	1300
Inlet (DN 150)	Newton-meter	2300	1180	1760
Outlet (DN 125)	Newton-meter	2300	1180	1760

Flange specification

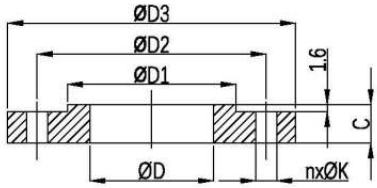

ANSI B16.1 250 Lb RF	ØD	ØD1	ØD2	ØD3	n	ØK	C
Inlet 6 INCH	154.2	246.1	269.7	317.5	12	22.3	36.5
Outlet 5 INCH	128.3	211.0	234.9	279.4	8	22.3	35.0

NOTE : ALL DIMENSIONS AND WEIGHTS ARE PRELIMINARY NOT FOR CONSTRUCTION USE. CERTIFIED AS BUILT DRAWINGS ARE AVAILABLE UPON REQUEST.

The contents of this publication must not be regarded as binding. EBARA ENGINEERING SINGAPORE PTE. LTD. reserves the right to effect any modification it deems necessary, without prior notice.

OUTLINE DIMENSIONS - SINGLE STAGE

ELECTRIC MOTOR DRIVEN FIRE PUMP SETS

CNPA150-125-250

UL LISTED FM APPROVED

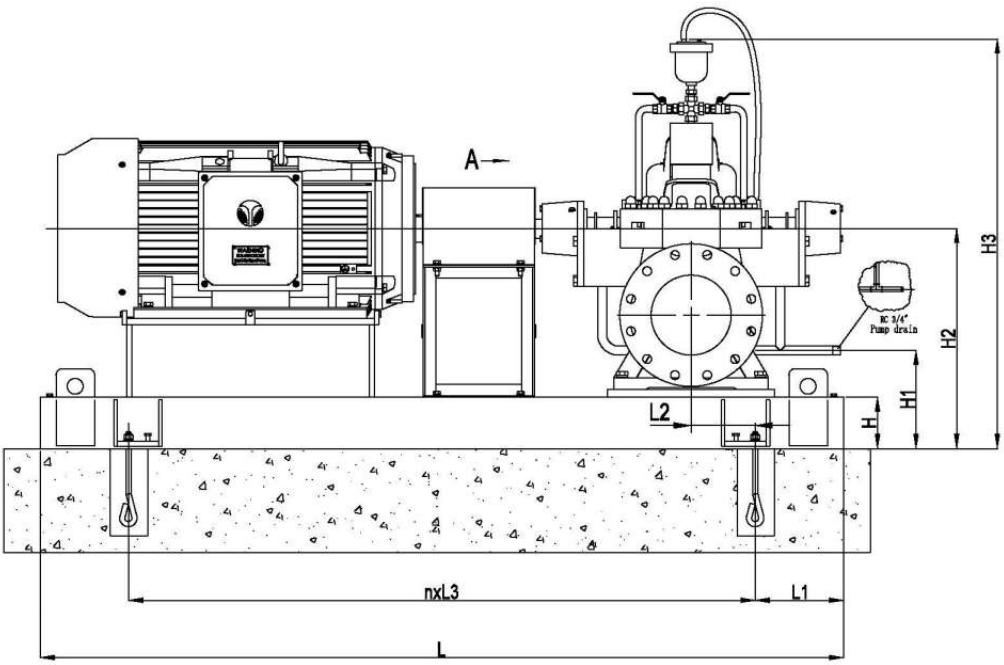

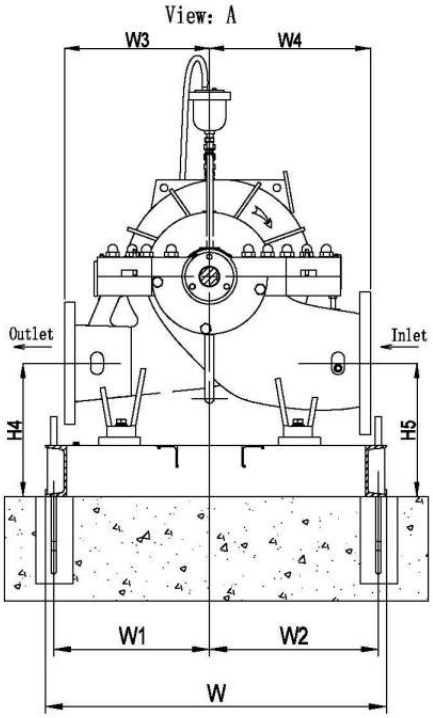

Motor model	Dimensions (Unit:mm)																Anchor bolt	Anchor bolt box
	L	L1	L2	n	L3	W	W1	W2	W3	W4	H	H1	H2	H3	H4	H5		
F-TDC364TS75U2B	1600	200	170	2	600	800	375	375	300	350	120	220	540	1000	340	340	6-M16x300	6-120x120x300
F-TXC365TS75U2B	1700	150	250	2	700	800	350	400	300	350	120	220	540	1000	340	340	6-M16x300	6-120x120x300
F-TDC365TS100U2B	1600	200	170	2	600	800	375	375	300	350	120	220	540	1000	340	340	6-M16x300	6-120x120x300
F-TXC405TS100U2B	1800	150	230	2	750	800	350	400	300	350	140	240	560	1020	360	360	6-M16x300	6-120x120x300
F-TDC404TS125U2B	1800	150	230	2	750	800	350	400	300	350	140	245	565	1025	365	365	6-M16x300	6-120x120x300
F-TXC444TS125U2B	1900	150	230	2	800	900	350	500	300	350	140	240	560	1020	360	360	6-M16x300	6-120x120x300
F-TDC405TS150U2B	1800	150	230	2	750	800	350	400	300	350	140	245	565	1025	365	365	6-M16x300	6-120x120x300
F-TXC445TS150U2B	1900	150	230	2	800	900	350	500	300	350	140	240	560	1020	360	360	6-M16x300	6-120x120x300
F-TDC444TS200U2B	1900	150	230	2	800	900	400	450	300	350	140	240	560	1020	360	360	6-M16x300	6-120x120x300
F-TXC447TS200U2B	2100	150	220	3	600	900	350	500	300	350	140	240	560	1020	360	360	8-M16x300	8-120x120x300
F-TDC449TS250U2B	2000	100	230	3	600	900	345	505	300	350	140	240	560	1020	360	360	8-M16x300	8-120x120x300
F-TXC449TS250U2B	2100	150	220	3	600	900	350	500	300	350	140	240	560	1020	360	360	8-M16x300	8-120x120x300

The force and torque of the pipe

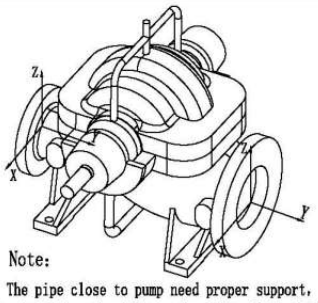

Note:

The pipe close to pump need proper support, Gravity from the inlet and outlet lines shall not be borne by the pump.

Pump Flange	Unit	Axial Direction		
		Fx	Fy	Fz
Inlet (6 INCH)	Pound	560	700	460
Outlet (5 INCH)	Pound	560	700	460
Inlet (DN 150)	Newton	2490	3110	2050
Outlet (DN 125)	Newton	2490	3110	2050
Pump Flange	**Unit**	**Axial Direction**		
		Mx	My	Mz
Inlet (6 INCH)	Pound-Feet	1700	870	1300
Outlet (5 INCH)	Pound-Feet	1700	870	1300
Inlet (DN 150)	Newton-meter	2300	1180	1760
Outlet (DN 125)	Newton-meter	2300	1180	1760

Flange specification

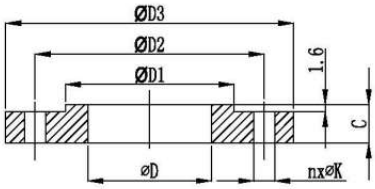

ANSI B16.1 250 Lb RF	ØD	ØD1	ØD2	ØD3	n	ØK	C
Inlet 6 INCH	154.2	246.1	269.7	317.5	12	22.3	36.5
Outlet 5 INCH	128.3	211.0	234.9	279.4	8	22.3	35.0

NOTE : ALL DIMENSIONS AND WEIGHTS ARE PRELIMINARY NOT FOR CONSTRUCTION USE. CERTIFIED AS BUILT DRAWINGS ARE AVAILABLE UPON REQUEST.

The contents of this publication must not be regarded as binding. EBARA ENGINEERING SINGAPORE PTE. LTD. reserves the right to effect any modification it deems necessary, without prior notice.

OUTLINE DIMENSIONS - SINGLE STAGE

ELECTRIC MOTOR DRIVEN FIRE PUMP SETS

CNPA150-125-310

UL LISTED FM APPROVED

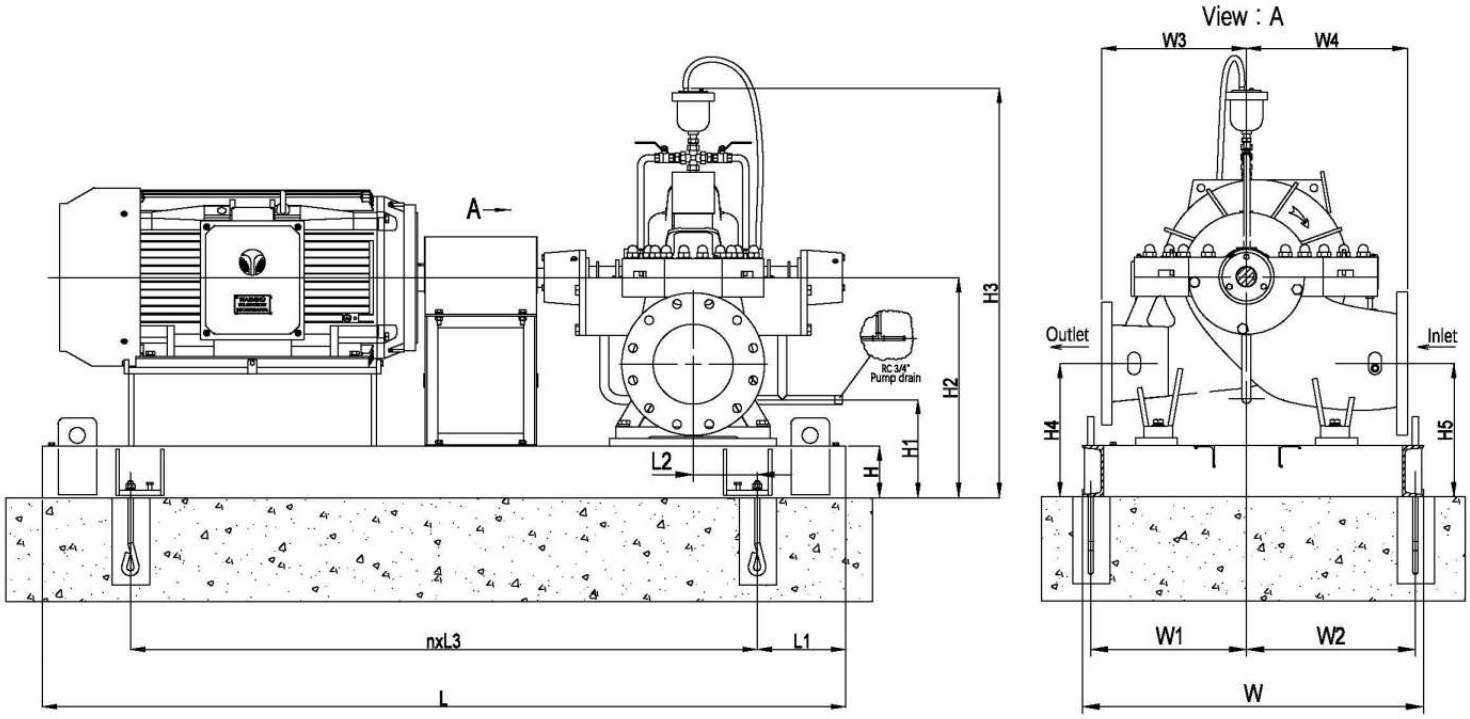

Motor model	Dimensions (Unit:mm)																Anchor bolt	Anchor bolt box
	L	L1	L2	n	L3	W	W1	W2	W3	W4	H	H1	H2	H3	H4	H5		
F-TDC404TS125U2B	1700	150	230	2	700	800	345	405	350	400	120	205	545	1040	325	325	6-M16x300	6-120x120x300
F-TXC444TS125U2B	1900	150	230	2	800	900	400	450	350	400	140	225	565	1060	345	345	6-M16x300	6-120x120x300
F-TDC405TS150U2B	1700	150	230	2	700	800	345	405	350	400	120	205	545	1040	325	325	6-M16x300	6-120x120x300
F-TXC445TS150U2B	1900	150	230	2	800	900	400	450	350	400	140	225	565	1060	345	345	6-M16x300	6-120x120x300
F-TDC444TS200U2B	1800	150	240	2	750	900	370	480	350	400	140	225	565	1060	345	345	6-M16x300	6-120x120x300
F-TXC447TS200U2B	2100	150	230	3	600	900	375	475	350	400	140	225	565	1060	345	345	8-M16x300	8-120x120x300
F-TDC449TS250U2B	2000	100	280	3	600	900	375	475	350	400	140	225	565	1060	345	345	8-M16x300	8-120x120x300
F-TXC449TS250U2B	2100	150	230	3	600	900	375	475	350	400	140	225	565	1060	345	345	8-M16x300	8-120x120x300
F-TDC449TS300U2B	2000	100	280	3	600	900	375	475	350	400	140	225	565	1060	345	345	8-M16x300	8-120x120x300
F-TXC449TS300U2B	2100	150	230	3	600	900	375	475	350	400	140	225	565	1060	345	345	8-M16x300	8-120x120x300

The force and torque of the pipe

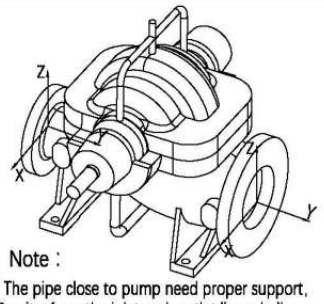

Note :

The pipe close to pump need proper support, Gravity from the inlet and outlet lines shall not be borne by the pump。

Pump Flange	Unit	Axial Direction		
		Fx	Fy	Fz
Inlet (6 INCH)	Pound	560	700	460
Outlet (5 INCH)	Pound	560	700	460
Inlet (DN 150)	Newton	2490	3110	2050
Outlet (DN 125)	Newton	2490	3110	2050
Pump Flange	Unit	Axial Direction		
		Mx	My	Mz
Inlet (6 INCH)	Pound-Feet	1700	870	1300
Outlet (5 INCH)	Pound-Feet	1700	870	1300
Inlet (DN 150)	Newton-meter	2300	1180	1760
Outlet (DN 125)	Newton-meter	2300	1180	1760

Flange specification

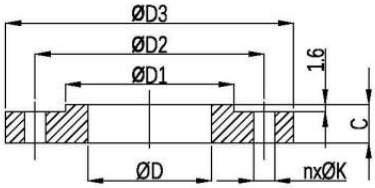

ANSI B16.1 250 Lb RF	ØD	ØD1	ØD2	ØD3	n	ØK	C
Inlet 6 INCH	154.2	246.1	269.7	317.5	12	22.3	36.5
Outlet 5 INCH	128.3	211.0	234.9	279.4	8	22.3	35.0

NOTE : ALL DIMENSIONS AND WEIGHTS ARE PRELIMINARY NOT FOR CONSTRUCTION USE. CERTIFIED AS BUILT DRAWINGS ARE AVAILABLE UPON REQUEST.

The contents of this publication must not be regarded as binding. EBARA ENGINEERING SINGAPORE PTE. LTD. reserves the right to effect any modification it deems necessary, without prior notice.

OUTLINE DIMENSIONS - SINGLE STAGE

ELECTRIC MOTOR DRIVEN FIRE PUMP SETS

CNPA150-125-400

UL LISTED FM APPROVED

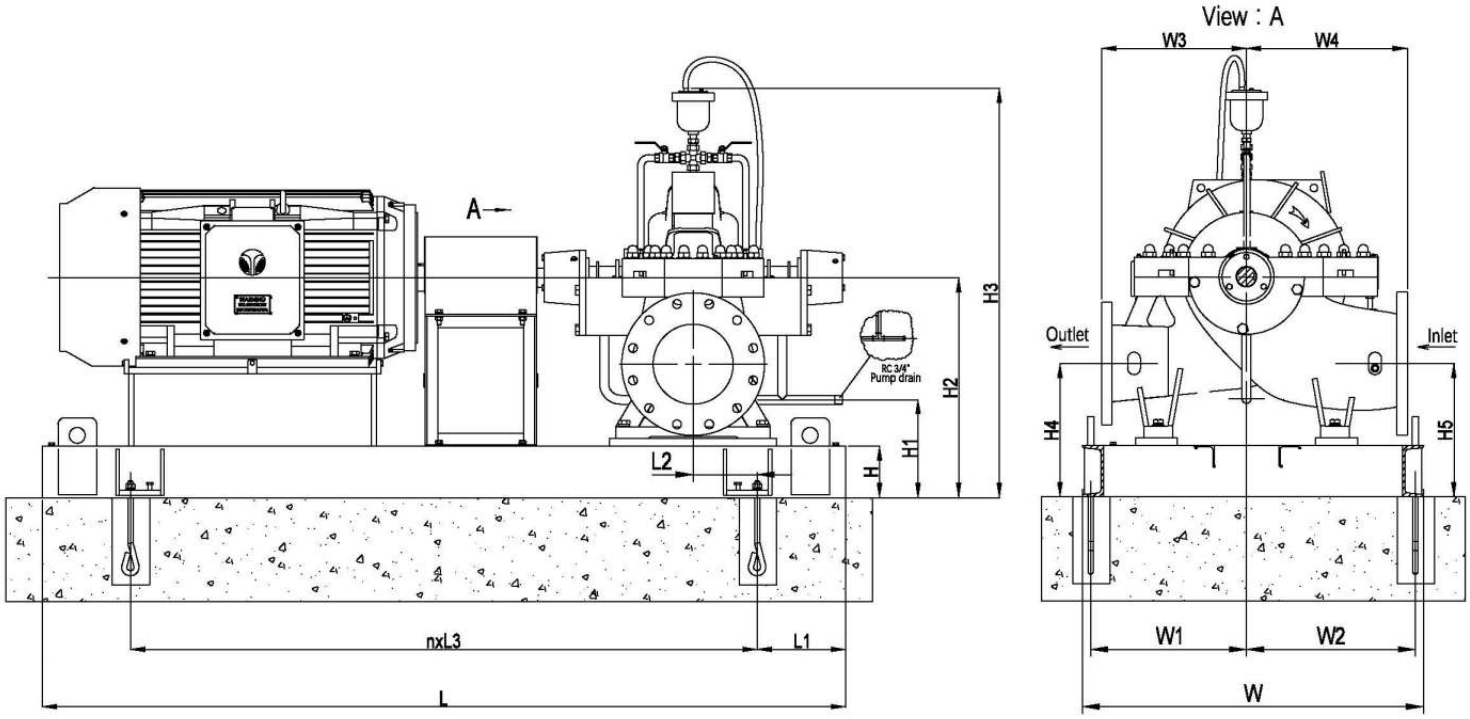

Motor model	Dimensions (Unit:mm)																Anchor bolt	Anchor bolt box
	L	L1	L2	n	L3	W	W1	W2	W3	W4	H	H1	H2	H3	H4	H5		
F-TDC405TS150U2B	1800	150	290	2	750	1000	425	525	350	500	140	250	620	1155	335	335	6-M16x300	6-120x120x300
F-TXC445TS150U2B	2000	200	220	2	800	1000	425	525	350	500	140	250	620	1155	335	335	6-M16x300	6-120x120x300
F-TDC444TS200U2B	2000	200	210	2	800	1000	425	525	350	500	140	250	620	1155	335	335	6-M16x300	6-120x120x300
F-TXC447TS200U2B	2300	300	150	2	850	1000	425	525	350	500	160	270	640	1175	355	355	6-M16x300	6-120x120x300
F-TDC449TS250U2B	2150	275	175	2	800	1000	425	525	350	500	140	250	620	1155	335	335	6-M16x300	6-120x120x300
F-TXC449TS250U2B	2300	300	150	2	850	1000	425	525	350	500	160	270	640	1175	355	355	6-M16x300	6-120x120x300

The force and torque of the pipe

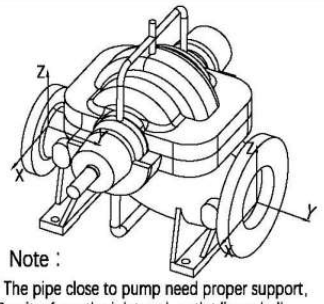

Note :

The pipe close to pump need proper support, Gravity from the inlet and outlet lines shall not be borne by the pump。

Pump Flange	Unit	Axial Direction		
		Fx	Fy	Fz
Inlet (6 INCH)	Pound	560	700	460
Outlet (5 INCH)	Pound	560	700	460
Inlet (DN 150)	Newton	2490	3110	2050
Outlet (DN 125)	Newton	2490	3110	2050
Pump Flange	**Unit**	**Axial Direction**		
		Mx	My	Mz
Inlet (6 INCH)	Pound-Feet	1700	870	1300
Outlet (5 INCH)	Pound-Feet	1700	870	1300
Inlet (DN 150)	Newton-meter	2300	1180	1760
Outlet (DN 125)	Newton-meter	2300	1180	1760

Flange specification

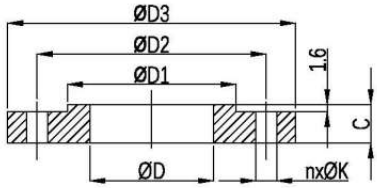

ANSI B16.1 250 Lb RF	ØD	ØD1	ØD2	ØD3	n	ØK	C
Inlet 6 INCH	154.2	246.1	269.7	317.5	12	22.3	36.5
Outlet 5 INCH	128.3	211.0	234.9	279.4	8	22.3	35.0

NOTE : ALL DIMENSIONS AND WEIGHTS ARE PRELIMINARY NOT FOR CONSTRUCTION USE. CERTIFIED AS BUILT DRAWINGS ARE AVAILABLE UPON REQUEST.

The contents of this publication must not be regarded as binding. EBARA ENGINEERING SINGAPORE PTE. LTD. reserves the right to effect any modification it deems necessary, without prior notice.

OUTLINE DIMENSIONS - SINGLE STAGE

ELECTRIC MOTOR DRIVEN FIRE PUMP SETS

CNPA200-150-250

UL LISTED FM APPROVED

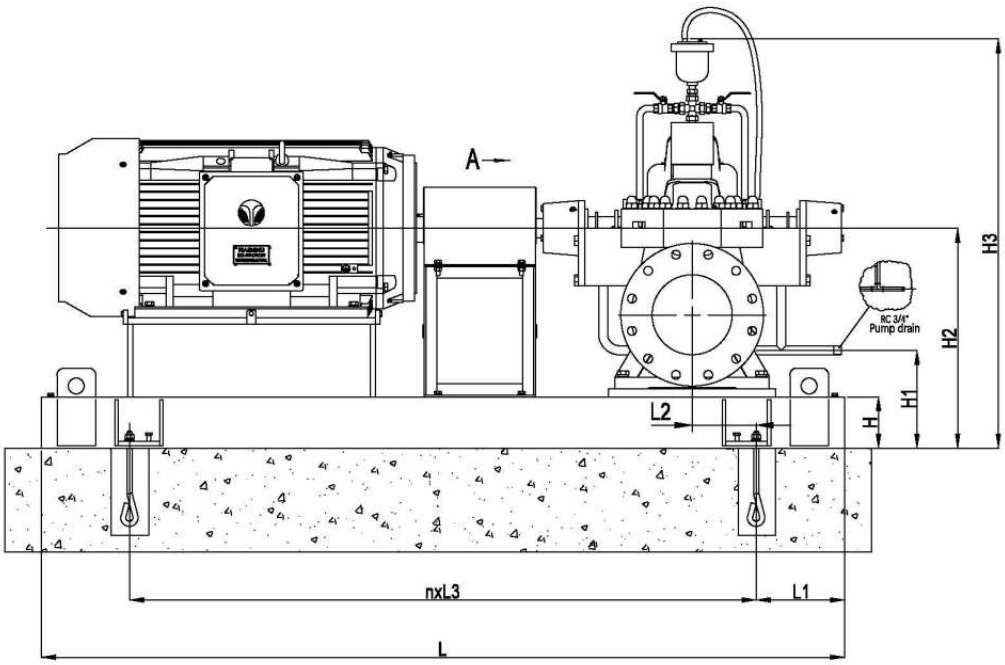

View : A

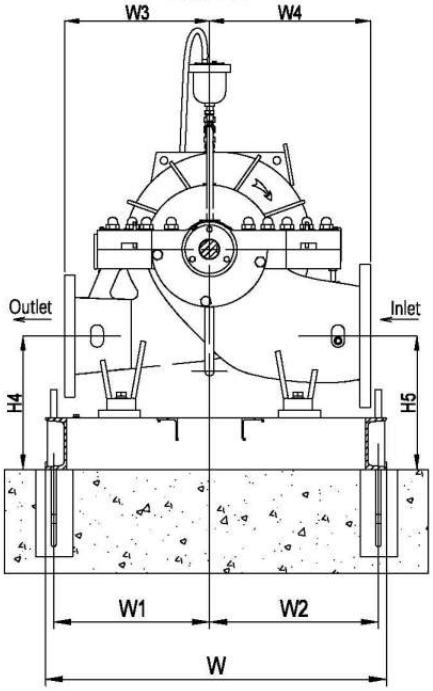

Motor model	Dimensions (Unit:mm)																Anchor bolt	Anchor bolt box
	L	L1	L2	n	L3	W	W1	W2	W3	W4	H	H1	H2	H3	H4	H5		
F-TDC365TS75U2B	1700	200	210	2	650	900	375	475	300	400	120	190	540	1038	340	340	6-M16x300	6-120x120x300
F-TXC365TS75U2B	1700	200	210	2	650	900	375	475	300	400	120	190	540	1038	340	340	6-M16x300	6-120x120x300
F-TDC365TS100U2B	1700	200	210	2	650	900	375	475	300	400	120	190	540	1038	340	340	6-M16x300	6-120x120x300
F-TXC405TS100U2B	1800	150	260	2	750	800	330	420	300	400	140	215	565	1038	365	365	6-M16x300	6-120x120x300
F-TDC404TS125U2B	1700	150	260	2	700	900	375	475	300	400	140	215	565	1038	365	365	6-M16x300	6-120x120x300
F-TXC444TS125U2B	1900	150	260	2	800	950	400	500	300	400	140	215	565	1038	365	365	6-M16x300	6-120x120x300
F-TDC405TS150U2B	1700	150	260	2	700	900	375	475	300	400	140	215	565	1038	365	365	6-M16x300	6-120x120x300
F-TXC445TS150U2B	1900	150	260	2	800	950	400	500	300	400	140	215	565	1038	365	365	6-M16x300	6-120x120x300
F-TDC444TS200U2B	1900	150	260	2	800	900	375	475	300	400	140	215	565	1038	365	365	6-M16x300	6-120x120x300
F-TXC447TS200U2B	2200	300	110	2	800	950	400	500	300	400	140	215	565	1038	365	365	6-M16x300	6-120x120x300
F-TDC449TS250U2B	2000	200	210	2	800	950	400	500	300	400	140	215	565	1038	365	365	6-M16x300	6-120x120x300
F-TXC449TS250U2B	2400	210	200	3	660	1050	425	575	300	400	140	215	565	1038	365	365	8-M16x300	8-120x120x300
F-TDC449TS300U2B	2000	200	210	2	800	950	400	500	300	400	140	215	565	1038	365	365	6-M16x300	6-120x120x300
F-TXC449TS300U2B	2400	210	200	3	660	1050	425	575	300	400	140	215	565	1038	365	365	8-M16x300	8-120x120x300

The force and torque of the pipe

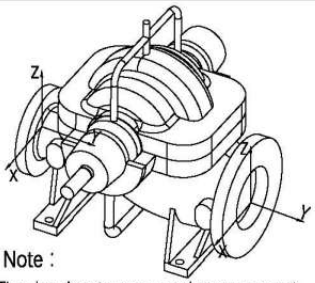

Note :

The pipe close to pump need proper support, Gravity from the inlet and outlet lines shall not be borne by the pump。

Pump Flange	Unit	Axial Direction		
		Fx	Fy	Fz
Inlet (8 INCH)	Pound	850	1100	700
Outlet (6 INCH)	Pound	560	700	460
Inlet (DN 200)	Newton	3780	4890	3110
Outlet (DN 150)	Newton	2490	3110	2050
Pump Flange	**Unit**	**Axial Direction**		
		Mx	My	Mz
Inlet (8 INCH)	Pound-Feet	2600	1300	1900
Outlet (6 INCH)	Pound-Feet	1700	870	1300
Inlet (DN 200)	Newton-meter	3530	1760	2580
Outlet (DN 150)	Newton-meter	2300	1180	1760

Flange specification

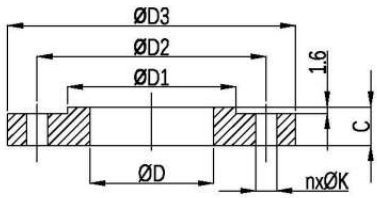

ANSI B16.1 250 Lb RF	ØD	ØD1	ØD2	ØD3	n	ØK	C
Inlet 8 INCH	203.2	303.2	330.2	381.0	12	25.4	41.1
Outlet 6 INCH	154.2	246.1	269.7	317.5	12	22.3	36.5

NOTE : ALL DIMENSIONS AND WEIGHTS ARE PRELIMINARY NOT FOR CONSTRUCTION USE. CERTIFIED AS BUILT DRAWINGS ARE AVAILABLE UPON REQUEST.

The contents of this publication must not be regarded as binding. EBARA ENGINEERING SINGAPORE PTE. LTD. reserves the right to effect any modification it deems necessary, without prior notice.

OUTLINE DIMENSIONS - SINGLE STAGE

ELECTRIC MOTOR DRIVEN FIRE PUMP SETS

CNPA200-150-310

UL LISTED FM APPROVED

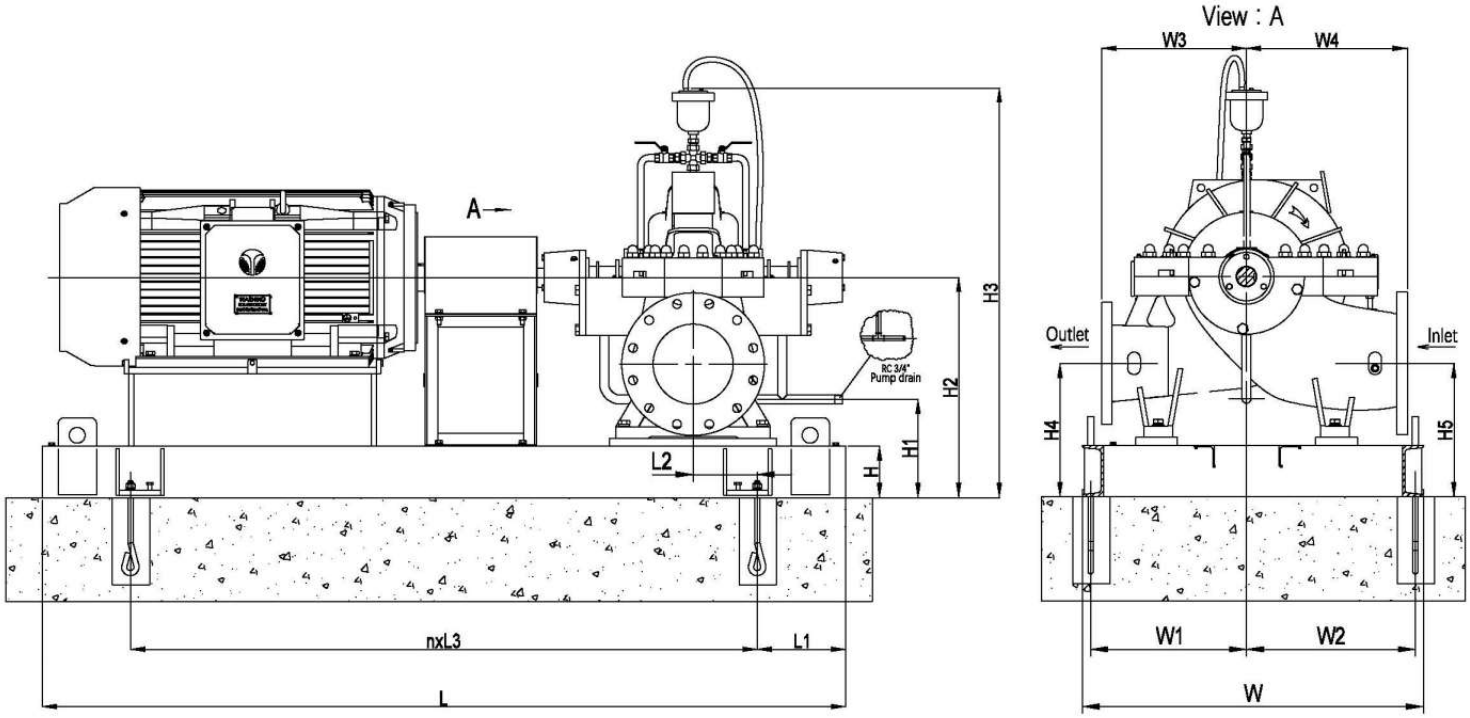

Motor model	Dimensions (Unit:mm)																Anchor bolt	Anchor bolt box
	L	L1	L2	n	L3	W	W1	W2	W3	W4	H	H1	H2	H3	H4	H5		
F-TDC405TS150U2B	1800	150	260	2	750	900	390	460	350	425	140	215	565	1055	355	370	6-M16x300	6-120x120x300
F-TDC444TS200U2B	1900	200	210	2	750	950	415	485	350	425	140	215	565	1055	355	370	6-M16x300	6-120x120x300
F-TDC447TS350U2B	2100	250	160	2	800	950	415	485	350	425	140	215	565	1055	355	370	6-M16x300	6-120x120x300
F-TDC449TS300U2B	2100	250	160	2	800	950	415	485	350	425	140	215	565	1055	355	370	6-M16x300	6-120x120x300
F-TXC445TS150U2B	2000	200	210	2	800	950	415	485	350	425	140	215	565	1055	355	370	6-M16x300	6-120x120x300
F-TXC447TS200U2B	2200	300	110	2	800	950	415	485	350	425	140	215	565	1055	355	370	6-M16x300	6-120x120x300
F-TXC449TS250U2B	2200	300	110	2	800	950	415	485	350	425	140	215	565	1055	355	370	6-M16x300	6-120x120x300
F-TXC449TS300U2B	2400	150	260	3	700	1050	440	560	350	425	140	215	565	1055	355	370	8-M16x300	8-120x120x300
F-TXC586/7TS350U2B	2500	275	135	3	650	1100	425	625	350	425	160	235	585	1075	375	390	8-M20x400	8-120x120x400

The force and torque of the pipe

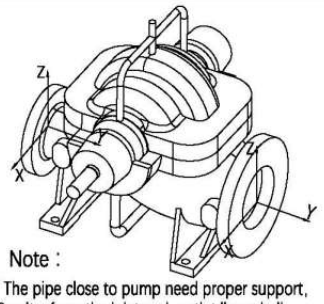

Note :

The pipe close to pump need proper support, Gravity from the inlet and outlet lines shall not be borne by the pump。

Pump Flange	Unit	Axial Direction		
		Fx	Fy	Fz
Inlet (8 INCH)	Pound	850	1100	700
Outlet (6 INCH)	Pound	560	700	460
Inlet (DN 200)	Newton	3780	4890	3110
Outlet (DN 150)	Newton	2490	3110	2050
Pump Flange	**Unit**	**Axial Direction**		
		Mx	My	Mz
Inlet (8 INCH)	Pound-Feet	2600	1300	1900
Outlet (6 INCH)	Pound-Feet	1700	870	1300
Inlet (DN 200)	Newton-meter	3530	1760	2580
Outlet (DN 150)	Newton-meter	2300	1180	1760

Flange specification

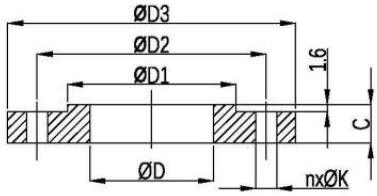

ANSI B16.1 250 Lb RF	ØD	ØD1	ØD2	ØD3	n	ØK	C
Inlet 8 INCH	203.2	303.2	330.2	381.0	12	25.4	41.1
Outlet 6 INCH	154.2	246.1	269.7	317.5	12	22.3	36.5

NOTE : ALL DIMENSIONS AND WEIGHTS ARE PRELIMINARY NOT FOR CONSTRUCTION USE. CERTIFIED AS BUILT DRAWINGS ARE AVAILABLE UPON REQUEST.

The contents of this publication must not be regarded as binding. EBARA ENGINEERING SINGAPORE PTE. LTD. reserves the right to effect any modification it deems necessary, without prior notice.

OUTLINE DIMENSIONS - SINGLE STAGE

ELECTRIC MOTOR DRIVEN FIRE PUMP SETS

CNPA200-150-330	UL LISTED FM APPROVED

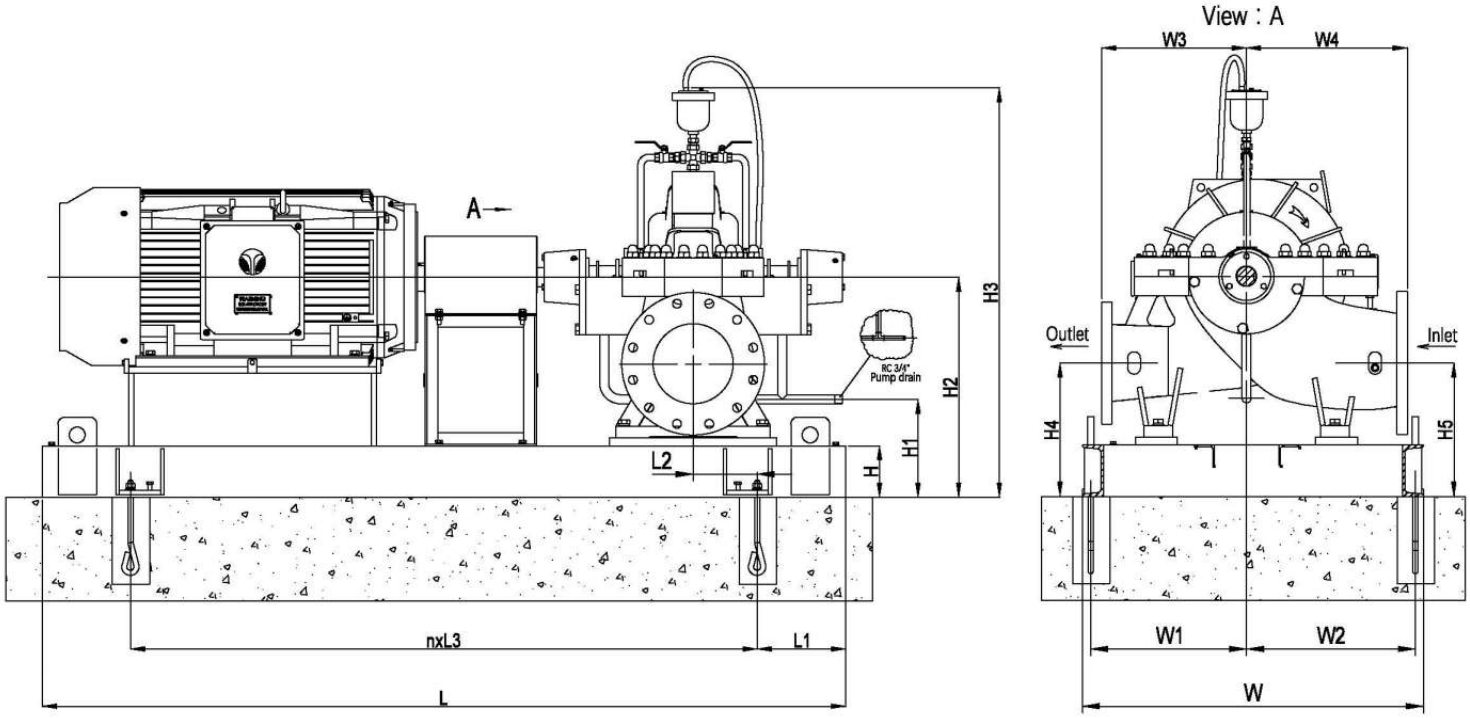

Motor model	Dimensions (Unit:mm)																Anchor bolt	Anchor bolt box
	L	L1	L2	n	L3	W	W1	W2	W3	W4	H	H1	H2	H3	H4	H5		
F-TDC444TS200U2B	2000	200	220	2	800	950	420	480	350	415	140	225	620	1155	390	390	6-M16x300	6-120x120x300
F-TDC447TS300U2B	2150	275	145	2	800	950	420	480	350	415	140	225	620	1155	390	390	6-M16x300	6-120x120x300
F-TDC449TS250U2B	2150	275	145	2	800	950	420	480	350	415	140	225	620	1155	390	390	6-M16x300	6-120x120x300
F-TXC447TS200U2B	2200	300	120	2	800	950	420	480	350	415	140	225	620	1155	390	390	6-M16x300	8-120x120x300
F-TXC449TS250U2B	2200	300	120	2	800	950	420	480	350	415	140	225	620	1155	390	390	6-M16x300	8-120x120x300
F-TXC449TS300U2B	2400	150	270	3	700	1050	445	555	350	415	140	225	620	1155	390	390	8-M16x300	8-120x120x300

The force and torque of the pipe

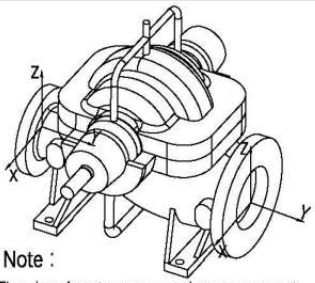

Note :

The pipe close to pump need proper support, Gravity from the inlet and outlet lines shall not be borne by the pump。

Pump Flange	Unit	Axial Direction		
		Fx	Fy	Fz
Inlet (8 INCH)	Pound	850	1100	700
Outlet (6 INCH)	Pound	560	700	460
Inlet (DN 200)	Newton	3780	4890	3110
Outlet (DN 150)	Newton	2490	3110	2050
Pump Flange	**Unit**	**Axial Direction**		
		Mx	My	Mz
Inlet (8 INCH)	Pound-Feet	2600	1300	1900
Outlet (6 INCH)	Pound-Feet	1700	870	1300
Inlet (DN 200)	Newton-meter	3530	1760	2580
Outlet (DN 150)	Newton-meter	2300	1180	1760

Flange specification

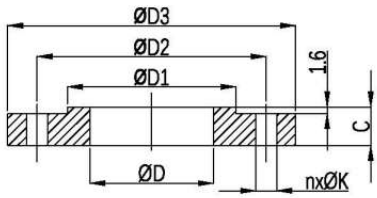

ANSI B16.1 250 Lb RF	ØD	ØD1	ØD2	ØD3	n	ØK	C
Inlet 8 INCH	203.2	303.2	330.2	381.0	12	25.4	41.1
Outlet 6 INCH	154.2	246.1	269.7	317.5	12	22.3	36.5

NOTE : ALL DIMENSIONS AND WEIGHTS ARE PRELIMINARY NOT FOR CONSTRUCTION USE. CERTIFIED AS BUILT DRAWINGS ARE AVAILABLE UPON REQUEST.

The contents of this publication must not be regarded as binding. EBARA ENGINEERING SINGAPORE PTE. LTD. reserves the right to effect any modification it deems necessary, without prior notice.

OUTLINE DIMENSIONS - SINGLE STAGE

ELECTRIC MOTOR DRIVEN FIRE PUMP SETS

CNPA200-150-375

UL LISTED FM APPROVED

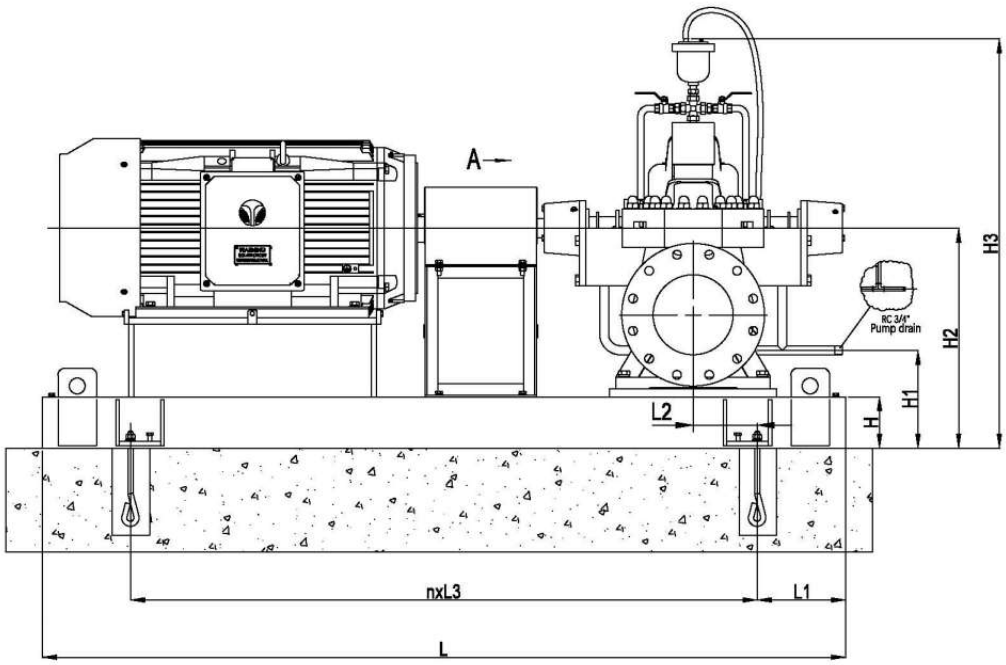

View : A

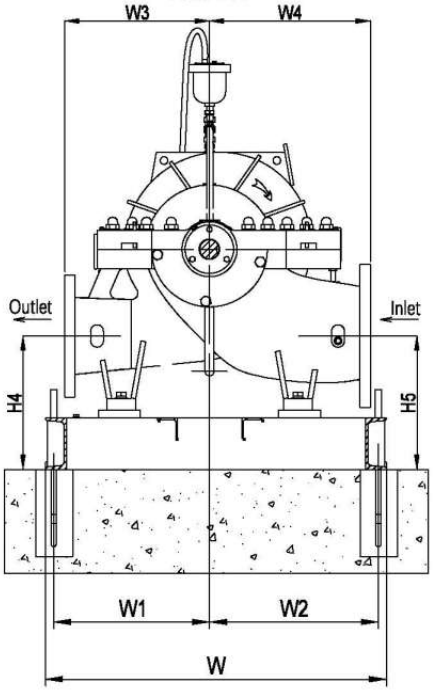

Motor model	Dimensions (Unit:mm)																Anchor bolt	Anchor bolt box
	L	L1	L2	n	L3	W	W1	W2	W3	W4	H	H1	H2	H3	H4	H5		
F-TDC365T75U4B	1700	150	270	2	700	850	365	435	340	420	120	205	600	1172	350	350	6-M16x300	6-120x120x300
F-TXC365T75U4B	1800	150	270	2	750	850	365	435	340	420	120	205	600	1172	350	350	6-M16x300	6-120x120x300
F-TDC405T100U4B	1900	150	270	2	800	850	365	435	340	420	120	205	600	1172	350	350	6-M16x300	6-120x120x300
F-TXC405T100U4B	2000	200	220	2	800	850	365	435	340	420	120	205	600	1172	350	350	6-M16x300	6-120x120x300
F-TDC405T125U4B	1900	150	270	2	800	850	365	435	340	420	120	205	600	1172	350	350	6-M16x300	6-120x120x300
F-TXC444T125U4B	2100	250	170	2	800	900	375	475	340	420	140	225	620	1192	370	370	6-M16x300	6-120x120x300
F-TDC444T150U4B	2000	200	220	2	800	900	375	475	340	420	140	225	620	1192	370	370	6-M16x300	6-120x120x300
F-TXC445T150U4B	2100	250	170	2	800	900	375	475	340	420	140	225	620	1192	370	370	6-M16x300	6-120x120x300
F-TDC445T200U4B	2000	200	220	2	800	900	375	475	340	420	140	225	620	1192	370	370	6-M16x300	6-120x120x300
F-TXC447T200U4B	2300	300	120	2	850	900	375	475	340	420	140	225	620	1192	370	370	6-M16x300	6-120x120x300

The force and torque of the pipe

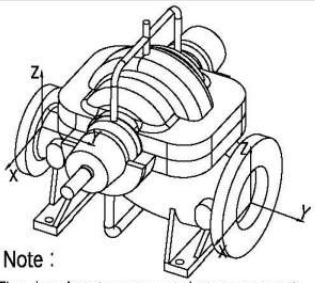

Note :

The pipe close to pump need proper support, Gravity from the inlet and outlet lines shall not be borne by the pump。

Pump Flange	Unit	Axial Direction		
		Fx	Fy	Fz
Inlet (8 INCH)	Pound	850	1100	700
Outlet (6 INCH)	Pound	560	700	460
Inlet (DN 200)	Newton	3780	4890	3110
Outlet (DN 150)	Newton	2490	3110	2050
Pump Flange	**Unit**	**Axial Direction**		
		Mx	My	Mz
Inlet (8 INCH)	Pound-Feet	2600	1300	1900
Outlet (6 INCH)	Pound-Feet	1700	870	1300
Inlet (DN 200)	Newton-meter	3530	1760	2580
Outlet (DN 150)	Newton-meter	2300	1180	1760

Flange specification

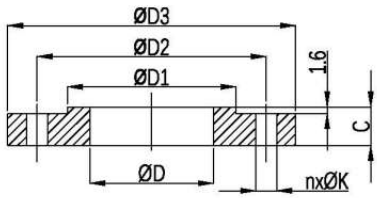

ANSI B16.1 250 Lb RF	ØD	ØD1	ØD2	ØD3	n	ØK	C
Inlet 8 INCH	203.2	303.2	330.2	381.0	12	25.4	41.1
Outlet 6 INCH	154.2	246.1	269.7	317.5	12	22.3	36.5

NOTE : ALL DIMENSIONS AND WEIGHTS ARE PRELIMINARY NOT FOR CONSTRUCTION USE. CERTIFIED AS BUILT DRAWINGS ARE AVAILABLE UPON REQUEST.

The contents of this publication must not be regarded as binding. EBARA ENGINEERING SINGAPORE PTE. LTD. reserves the right to effect any modification it deems necessary, without prior notice.

OUTLINE DIMENSIONS - SINGLE STAGE

ELECTRIC MOTOR DRIVEN FIRE PUMP SETS

CNPA200-150-400

UL LISTED FM APPROVED

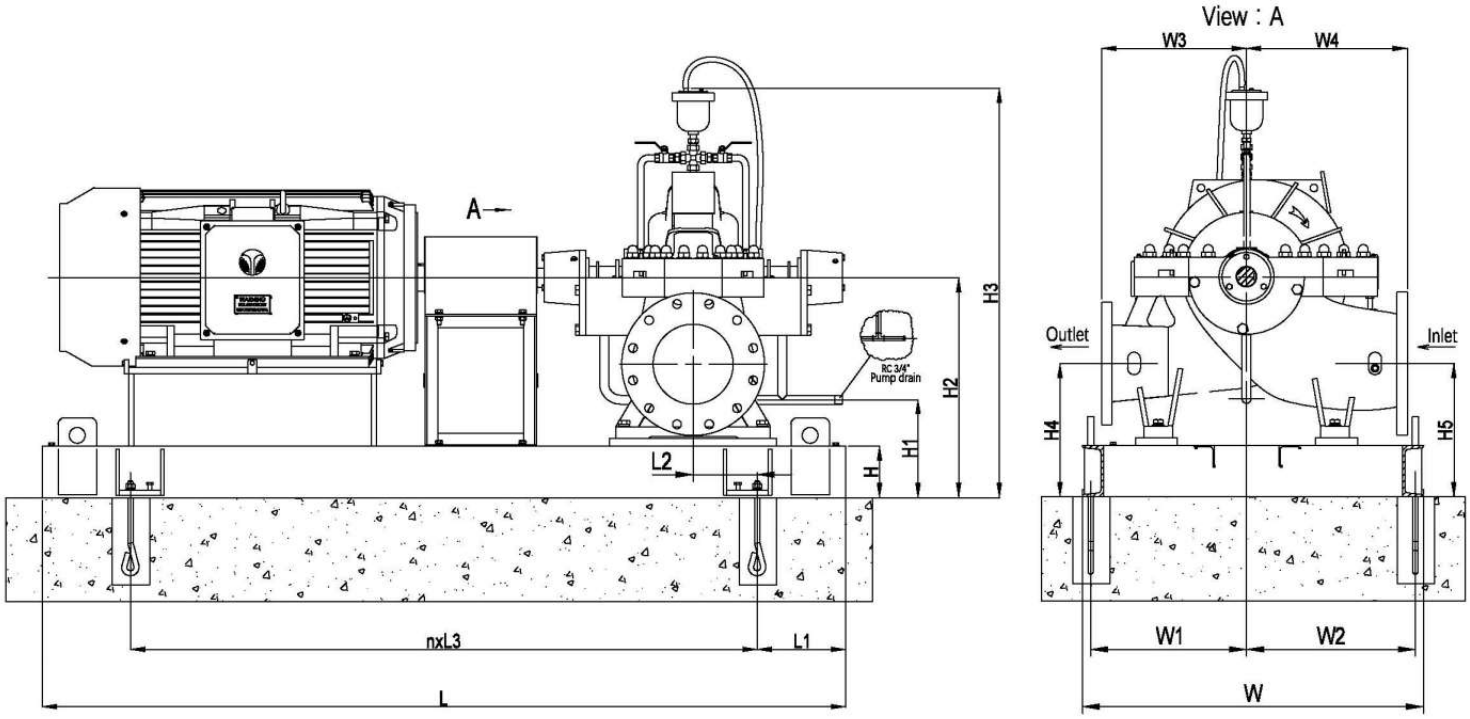

Motor model	Dimensions (Unit:mm)																Anchor bolt	Anchor bolt box
	L	L1	L2	n	L3	W	W1	W2	W3	W4	H	H1	H2	H3	H4	H5		
F-TDC444T150U4B	2000	200	220	2	800	900	375	475	370	450	140	225	620	1120	370	370	6-M16x300	6-120x120x300
F-TXC445T150U4B	2150	225	195	2	850	900	375	475	370	450	140	225	620	1120	370	370	6-M16x300	6-120x120x300
F-TDC445T200U4B	2000	200	220	2	800	900	375	475	370	450	140	225	620	1120	370	370	6-M16x300	6-120x120x300
F-TXC447T200U4B	2350	125	295	3	700	900	375	475	370	450	140	225	620	1120	370	370	8-M16x300	8-120x120x300

The force and torque of the pipe

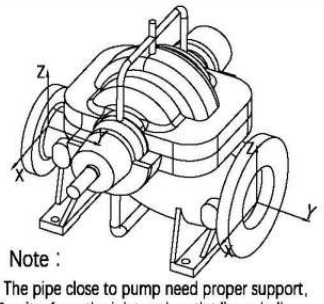

Note :

The pipe close to pump need proper support, Gravity from the inlet and outlet lines shall not be borne by the pump。

Pump Flange	Unit	Axial Direction		
		Fx	Fy	Fz
Inlet (8 INCH)	Pound	850	1100	700
Outlet (6 INCH)	Pound	560	700	460
Inlet (DN 200)	Newton	3780	4890	3110
Outlet (DN 150)	Newton	2490	3110	2050
Pump Flange	**Unit**	**Axial Direction**		
		Mx	My	Mz
Inlet (8 INCH)	Pound-Feet	2600	1300	1900
Outlet (6 INCH)	Pound-Feet	1700	870	1300
Inlet (DN 200)	Newton-meter	3530	1760	2580
Outlet (DN 150)	Newton-meter	2300	1180	1760

Flange specification

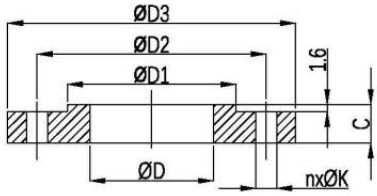

ANSI B16.1 250 Lb RF	ØD	ØD1	ØD2	ØD3	n	ØK	C
Inlet 8 INCH	203.2	303.2	330.2	381.0	12	25.4	41.1
Outlet 6 INCH	154.2	246.1	269.7	317.5	12	22.3	36.5

NOTE : ALL DIMENSIONS AND WEIGHTS ARE PRELIMINARY NOT FOR CONSTRUCTION USE. CERTIFIED AS BUILT DRAWINGS ARE AVAILABLE UPON REQUEST.

The contents of this publication must not be regarded as binding. EBARA ENGINEERING SINGAPORE PTE. LTD. reserves the right to effect any modification it deems necessary, without prior notice.

OUTLINE DIMENSIONS - SINGLE STAGE

ELECTRIC MOTOR DRIVEN FIRE PUMP SETS

CNPA200-150-420

UL LISTED FM APPROVED

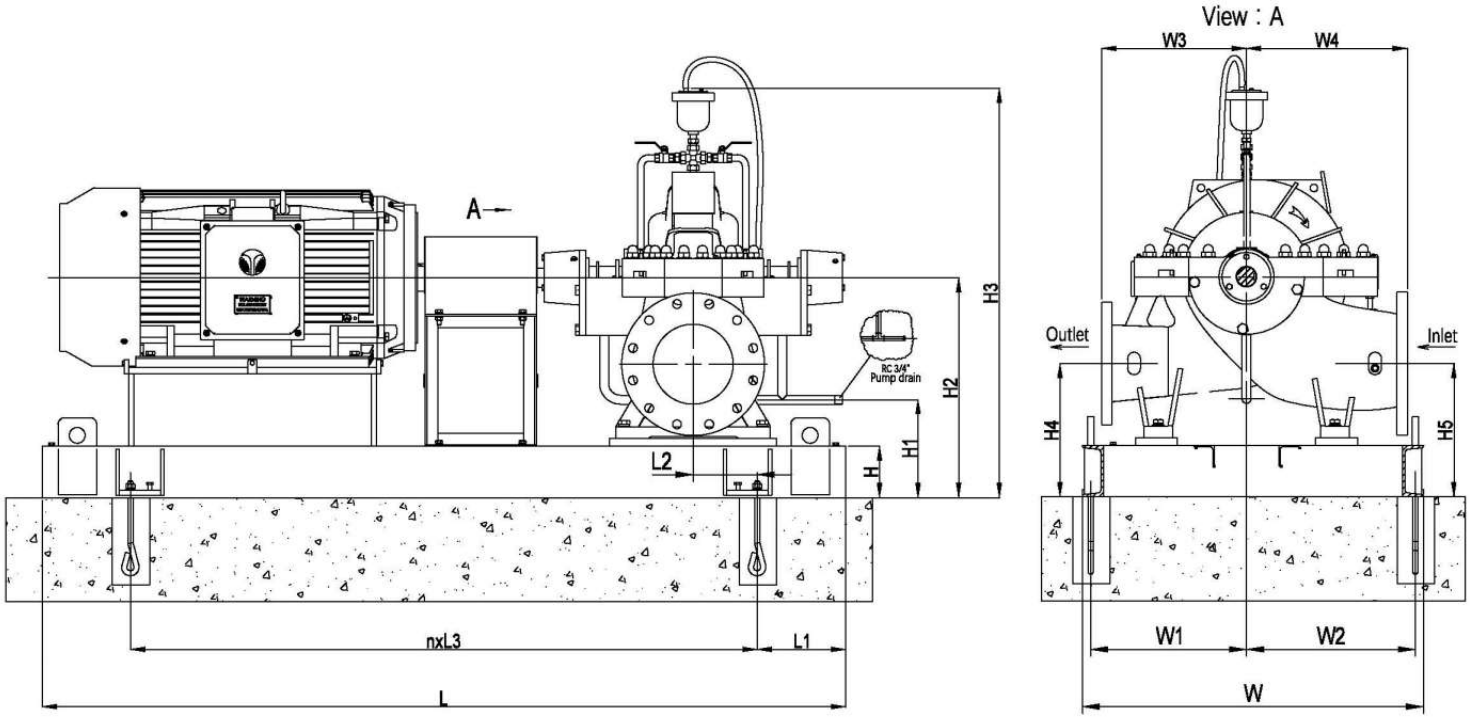

Motor model	Dimensions (Unit:mm)																Anchor bolt	Anchor bolt box
	L	L1	L2	n	L3	W	W1	W2	W3	W4	H	H1	H2	H3	H4	H5		
F-TDC447TS300U2B	2100	250	160	2	800	950	425	475	400	450	140	195	620	1155	340	370	6-M16x300	6-120x120x300
F-TXC449TS250U2B	2200	300	110	2	800	950	425	475	400	450	140	195	620	1155	340	370	6-M16x300	6-120x120x300
F-TXC449TS300U2B	2400	150	260	3	700	1050	450	550	400	450	140	195	620	1155	340	370	8-M16x300	8-120x120x300
F-TXC586/7TS400U2B	2500	275	135	3	650	1100	425	625	400	450	160	215	640	1175	360	390	8-M20x400	8-120x120x400

The force and torque of the pipe

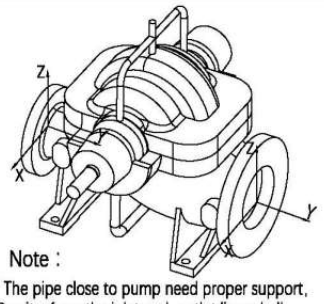

Note :

The pipe close to pump need proper support, Gravity from the inlet and outlet lines shall not be borne by the pump。

Pump Flange	Unit	Axial Direction		
		Fx	Fy	Fz
Inlet (8 INCH)	Pound	850	1100	700
Outlet (6 INCH)	Pound	560	700	460
Inlet (DN 200)	Newton	3780	4890	3110
Outlet (DN 150)	Newton	2490	3110	2050
Pump Flange	**Unit**	**Axial Direction**		
		Mx	My	Mz
Inlet (8 INCH)	Pound-Feet	2600	1300	1900
Outlet (6 INCH)	Pound-Feet	1700	870	1300
Inlet (DN 200)	Newton-meter	3530	1760	2580
Outlet (DN 150)	Newton-meter	2300	1180	1760

Flange specification

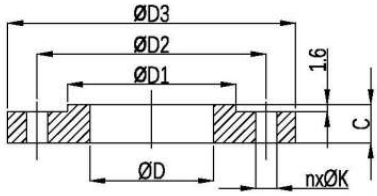

ANSI B16.1 250 Lb RF	ØD	ØD1	ØD2	ØD3	n	ØK	C
Inlet 8 INCH	203.2	303.2	330.2	381.0	12	25.4	41.1
Outlet 6 INCH	154.2	246.1	269.7	317.5	12	22.3	36.5

NOTE : ALL DIMENSIONS AND WEIGHTS ARE PRELIMINARY NOT FOR CONSTRUCTION USE. CERTIFIED AS BUILT DRAWINGS ARE AVAILABLE UPON REQUEST.

The contents of this publication must not be regarded as binding. EBARA ENGINEERING SINGAPORE PTE. LTD. reserves the right to effect any modification it deems necessary, without prior notice.

OUTLINE DIMENSIONS - SINGLE STAGE

ELECTRIC MOTOR DRIVEN FIRE PUMP SETS

CNPA200-150-480

UL LISTED FM APPROVED

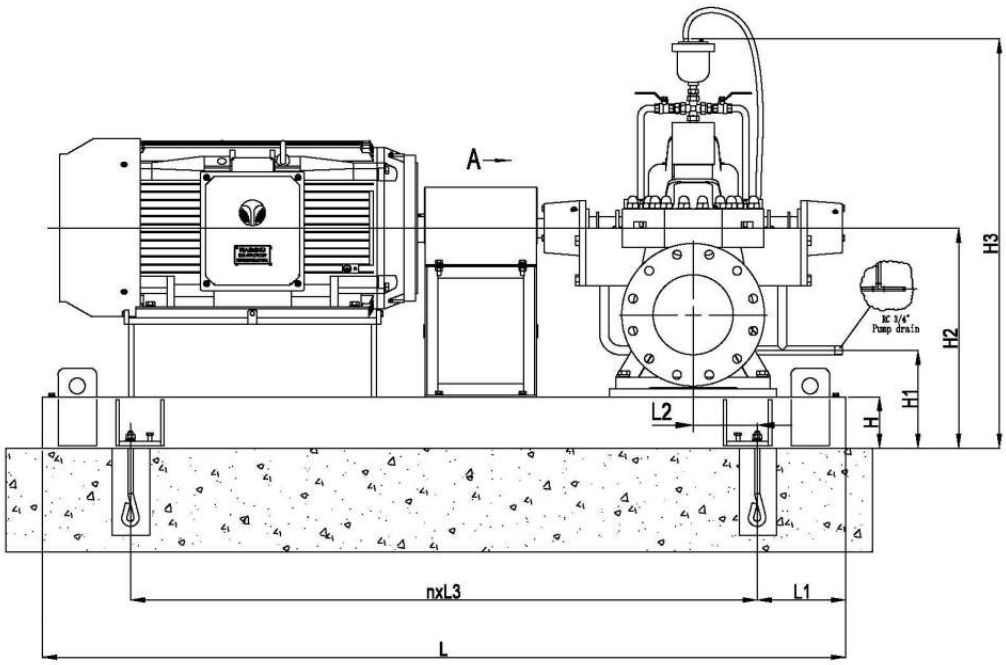

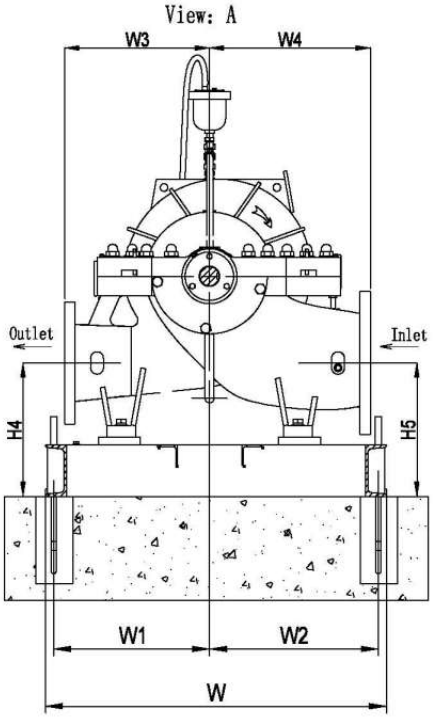

Motor model	Dimensions (Unit:mm)																Anchor bolt	Anchor bolt box
	L	L1	L2	n	L3	W	W1	W2	W3	W4	H	H1	H2	H3	H4	H5		
F-TDC444T150U4B	2100	250	190	2	800	1000	425	525	420	500	140	225	635	1266	385	385	6-M16x300	6-120x120x300
F-TDC445T200U4B	2100	250	190	2	800	1000	425	525	420	500	140	225	635	1266	385	385	6-M16x300	6-120x120x300
F-TDC447T250U4B	2300	175	265	3	650	1000	425	525	420	500	140	225	635	1266	385	385	8-M16x300	8-120x120x300
F-TDC449T300U4B	2300	175	265	3	650	1000	425	525	420	500	140	225	635	1266	385	385	8-M16x300	8-120x120x300
F-TXC447T200U4B	2400	150	290	3	700	1000	425	525	420	500	140	225	635	1266	385	385	8-M16x300	8-120x120x300
F-TXC449T250U4B	2400	150	290	3	700	1000	425	525	420	500	140	225	635	1266	385	385	8-M16x300	8-120x120x300
F-TXC449T300U4B	2400	150	290	3	700	1000	425	525	420	500	140	225	635	1266	385	385	8-M16x300	8-120x120x300

The force and torque of the pipe

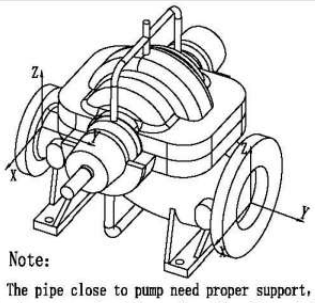

Note:

The pipe close to pump need proper support, Gravity from the inlet and outlet lines shall not be borne by the pump.

Pump Flange	Unit	Axial Direction		
		Fx	Fy	Fz
Inlet (8 INCH)	Pound	850	1100	700
Outlet (6 INCH)	Pound	560	700	460
Inlet (DN 200)	Newton	3780	4890	3110
Outlet (DN 150)	Newton	2490	3110	2050

Pump Flange	Unit	Axial Direction		
		Mx	My	Mz
Inlet (8 INCH)	Pound-Feet	2600	1300	1900
Outlet (6 INCH)	Pound-Feet	1700	870	1300
Inlet (DN 200)	Newton-meter	3530	1760	2580
Outlet (DN 150)	Newton-meter	2300	1180	1760

Flange specification

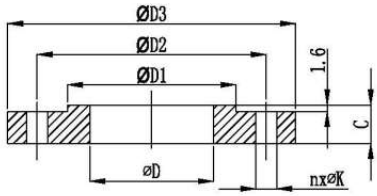

ANSI B16.1 250 Lb RF	ØD	ØD1	ØD2	ØD3	n	ØK	C
Inlet 8 INCH	203.2	303.2	330.2	381.0	12	25.4	41.1
Outlet 6 INCH	154.2	246.1	269.7	317.5	12	22.3	36.5

NOTE : ALL DIMENSIONS AND WEIGHTS ARE PRELIMINARY NOT FOR CONSTRUCTION USE. CERTIFIED AS BUILT DRAWINGS ARE AVAILABLE UPON REQUEST.

The contents of this publication must not be regarded as binding. EBARA ENGINEERING SINGAPORE PTE. LTD. reserves the right to effect any modification it deems necessary, without prior notice.

OUTLINE DIMENSIONS - SINGLE STAGE

ELECTRIC MOTOR DRIVEN FIRE PUMP SETS

CNPA200-150-480GL | UL LISTED | FM APPROVED

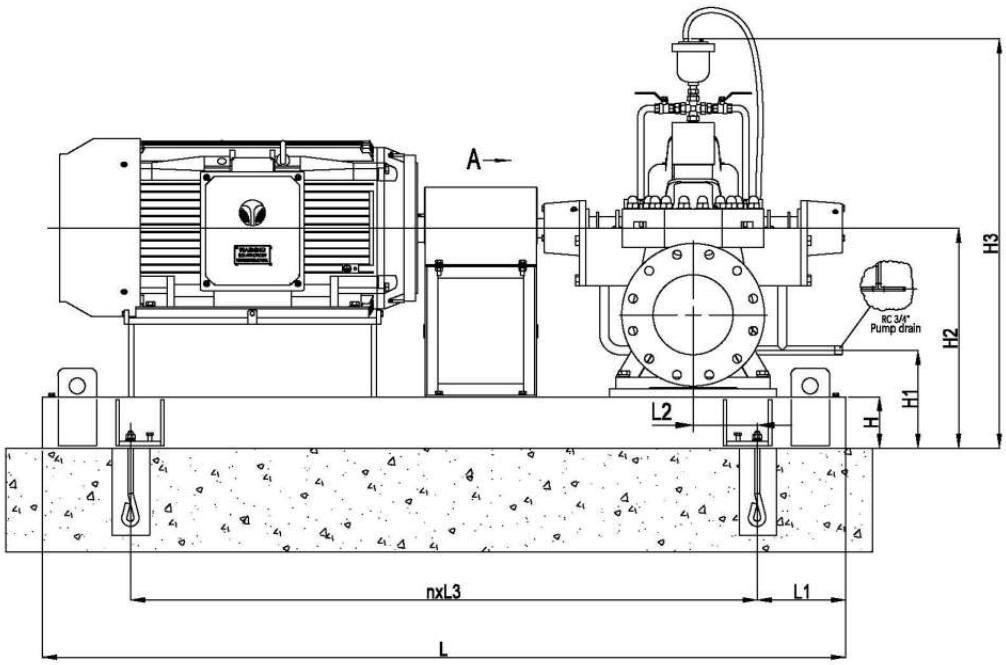

View : A

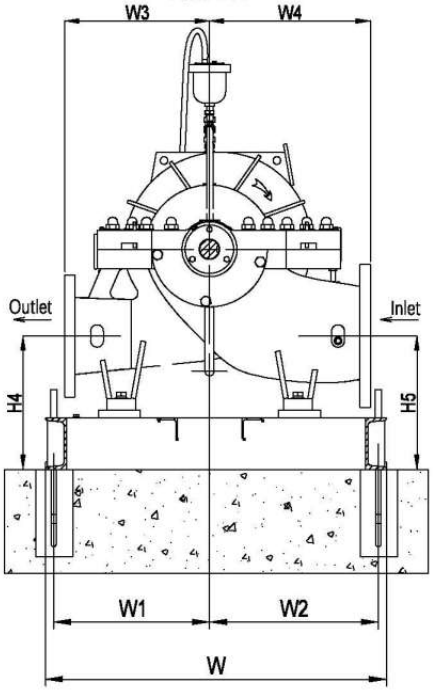

Motor model	Dimensions (Unit:mm)																Anchor bolt	Anchor bolt box
	L	L1	L2	n	L3	W	W1	W2	W3	W4	H	H1	H2	H3	H4	H5		
F-TDC445T200U4B	2100	250	190	2	800	1000	425	525	420	500	140	225	635	1266	385	385	6-M16x300	6-120x120x300
F-TDC447T250U4B	2300	175	265	3	650	1000	425	525	420	500	140	225	635	1266	385	385	8-M16x300	8-120x120x300
F-TDC449T300U4B	2300	175	265	3	650	1000	425	525	420	500	140	225	635	1266	385	385	8-M16x300	8-120x120x300
F-TDC449T350U4B	2300	175	265	3	650	1000	425	525	420	500	140	225	635	1266	385	385	8-M16x300	8-120x120x300
F-TXC447T200U4B	2400	150	290	3	700	1000	425	525	420	500	140	225	635	1266	385	385	8-M16x300	8-120x120x300
F-TXC449T250U4B	2400	150	290	3	700	1000	425	525	420	500	140	225	635	1266	385	385	8-M16x300	8-120x120x300
F-TXC449T300U4B	2400	150	290	3	700	1000	425	525	420	500	140	225	635	1266	385	385	8-M16x300	8-120x120x300
F-TXC586/7T350U4B	2700	150	290	3	800	1120	425	645	420	500	140	225	635	1266	385	385	8-M16x300	8-120x120x300

The force and torque of the pipe

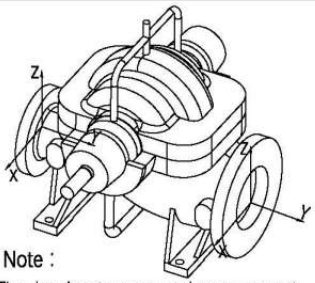

Note :

The pipe close to pump need proper support, Gravity from the inlet and outlet lines shall not be borne by the pump。

Pump Flange	Unit	Axial Direction		
		Fx	Fy	Fz
Inlet (8 INCH)	Pound	850	1100	700
Outlet (6 INCH)	Pound	560	700	460
Inlet (DN 200)	Newton	3780	4890	3110
Outlet (DN 150)	Newton	2490	3110	2050
Pump Flange	**Unit**	**Axial Direction**		
		Mx	My	Mz
Inlet (8 INCH)	Pound-Feet	2600	1300	1900
Outlet (6 INCH)	Pound-Feet	1700	870	1300
Inlet (DN 200)	Newton-meter	3530	1760	2580
Outlet (DN 150)	Newton-meter	2300	1180	1760

Flange specification

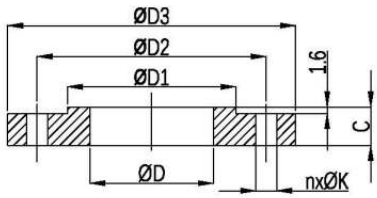

ANSI B16.1 250 Lb RF	ØD	ØD1	ØD2	ØD3	n	ØK	C
Inlet 8 INCH	203.2	303.2	330.2	381.0	12	25.4	41.1
Outlet 6 INCH	154.2	246.1	269.7	317.5	12	22.3	36.5

NOTE : ALL DIMENSIONS AND WEIGHTS ARE PRELIMINARY NOT FOR CONSTRUCTION USE. CERTIFIED AS BUILT DRAWINGS ARE AVAILABLE UPON REQUEST.

The contents of this publication must not be regarded as binding. EBARA ENGINEERING SINGAPORE PTE. LTD. reserves the right to effect any modification it deems necessary, without prior notice.

OUTLINE DIMENSIONS - SINGLE STAGE

ELECTRIC MOTOR DRIVEN FIRE PUMP SETS

CNPA200-150-600

UL LISTED FM APPROVED

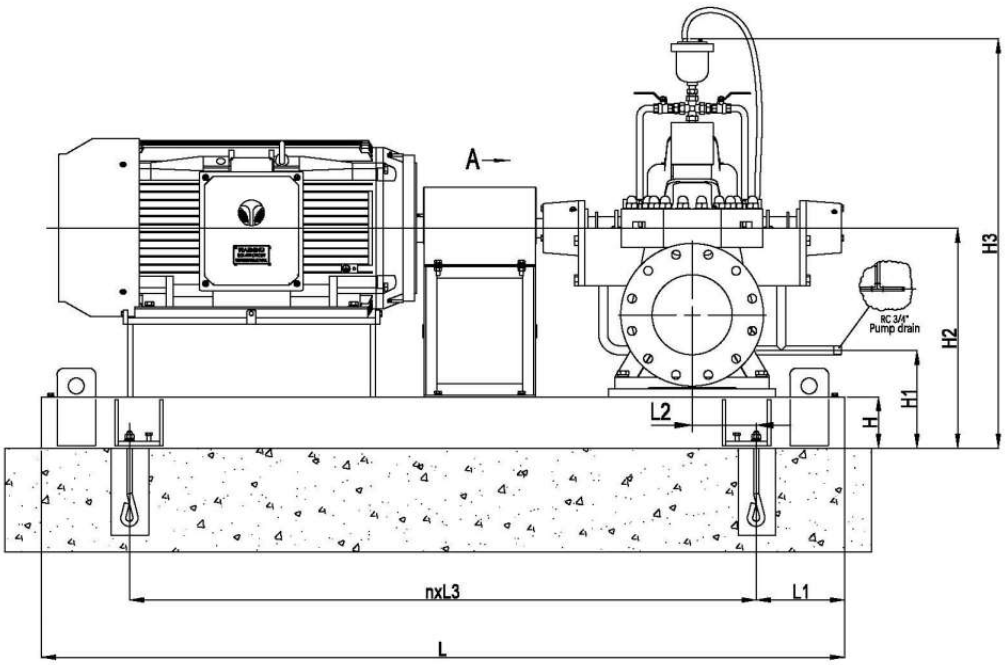

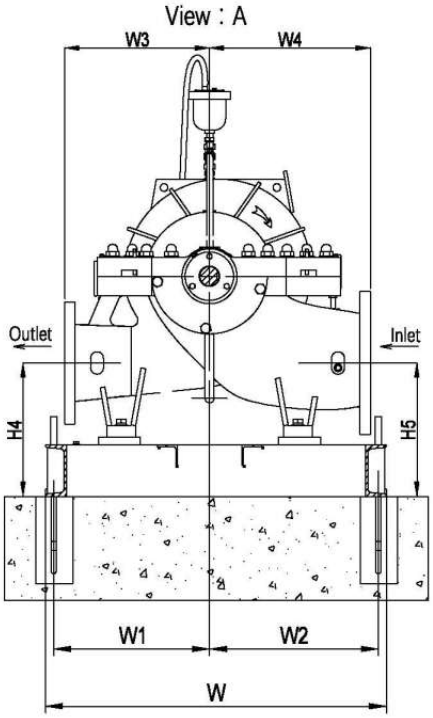

Motor model	Dimensions (Unit:mm)																Anchor bolt	Anchor bolt box
	L	L1	L2	n	L3	W	W1	W2	W3	W4	H	H1	H2	H3	H4	H5		
F-TDC445T200U4B	2100	250	190	2	800	1100	475	575	480	560	140	225	705	1350	375	375	6M16x300	6-120x120x300
F-TDC447T200U4B	2400	150	290	3	700	1100	475	575	480	560	140	225	705	1350	375	375	8-M20x400	8-120x120x400
F-TDC447T250U4B	2300	175	265	3	650	1100	475	575	480	560	140	225	705	1350	375	375	8-M20x400	8-120x120x400
F-TXC449T250U4B	2400	150	290	3	700	1100	475	575	480	560	140	225	705	1350	375	375	8-M20x400	8-120x120x400
F-TXC449T300U4B	2300	175	265	3	650	1100	475	575	480	560	140	225	705	1350	375	375	8-M20x400	8-120x120x400
F-TXC449T300U4B	2400	150	290	3	700	1100	475	575	480	560	140	225	705	1350	375	375	8-M20x400	8-120x120x400
F-TDC449T350U4B	2300	175	265	3	650	1100	475	575	480	560	140	225	705	1350	375	375	8-M20x400	8-120x120x400
F-TXC586/7T350U4B	2700	300	150	3	700	1200	475	675	480	560	160	245	725	1370	395	395	8-M20x400	8-120x120x400

The force and torque of the pipe

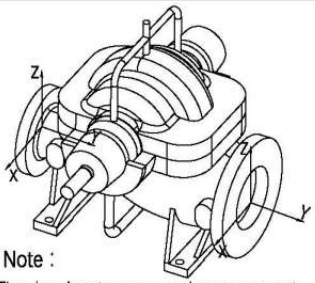

Note :

The pipe close to pump need proper support, Gravity from the inlet and outlet lines shall not be borne by the pump。

Pump Flange	Unit	Axial Direction		
		Fx	Fy	Fz
Inlet (8 INCH)	Pound	850	1100	700
Outlet (6 INCH)	Pound	560	700	460
Inlet (DN 200)	Newton	3780	4890	3110
Outlet (DN 150)	Newton	2490	3110	2050
Pump Flange	**Unit**	**Axial Direction**		
		Mx	My	Mz
Inlet (8 INCH)	Pound-Feet	2600	1300	1900
Outlet (6 INCH)	Pound-Feet	1700	870	1300
Inlet (DN 200)	Newton-meter	3530	1760	2580
Outlet (DN 150)	Newton-meter	2300	1180	1760

Flange specification

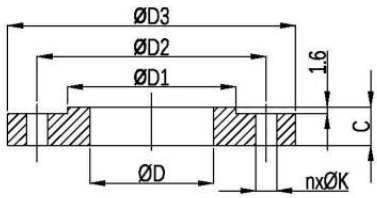

ANSI B16.1 250 Lb RF	ØD	ØD1	ØD2	ØD3	n	ØK	C
Inlet 8 INCH	203.2	303.2	330.2	381.0	12	25.4	41.1
Outlet 6 INCH	154.2	246.1	269.7	317.5	12	22.3	36.5

NOTE : ALL DIMENSIONS AND WEIGHTS ARE PRELIMINARY NOT FOR CONSTRUCTION USE. CERTIFIED AS BUILT DRAWINGS ARE AVAILABLE UPON REQUEST.

The contents of this publication must not be regarded as binding. EBARA ENGINEERING SINGAPORE PTE. LTD. reserves the right to effect any modification it deems necessary, without prior notice.

OUTLINE DIMENSIONS - SINGLE STAGE

ELECTRIC MOTOR DRIVEN FIRE PUMP SETS

CNPA200-150-640

UL LISTED FM APPROVED

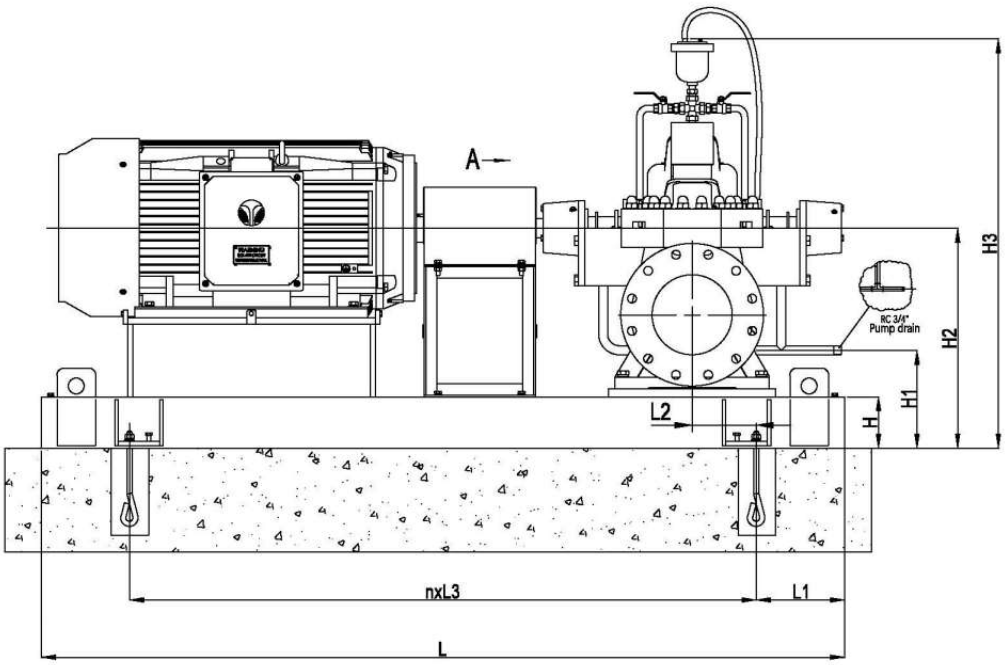

View : A

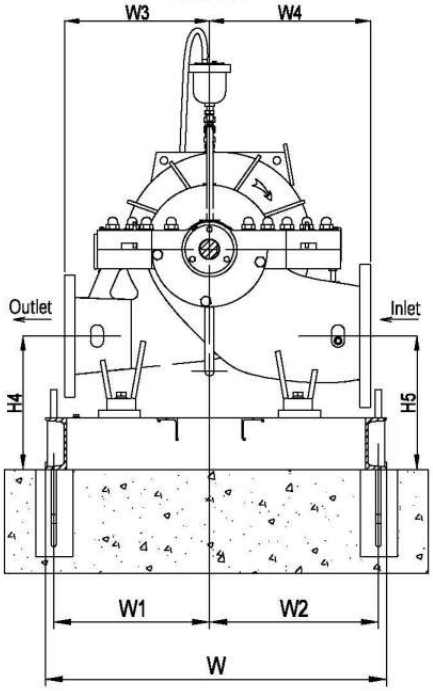

Motor model	Dimensions (Unit:mm)																Anchor bolt	Anchor bolt box
	L	L1	L2	n	L3	W	W1	W2	W3	W4	H	H1	H2	H3	H4	H5		
F-TDC445T200U4B	2300	175	375	3	650	1150	445	555	500	600	140	265	725	1745	375	375	8-M16x300	8-120x120x300
F-TDC447T250U4B	2500	275	275	3	650	1150	445	555	500	600	160	285	745	1765	395	395	8-M20x400	8-120x120x400
F-TDC449T300U4B	2500	275	275	3	650	1150	445	555	500	600	160	285	745	1765	395	395	8-M20x400	8-120x120x400
F-TXC447T200U4B	2600	250	300	3	700	1150	445	555	500	600	160	285	745	1765	395	395	8-M20x400	8-120x120x400
F-TXC449T250U4B	2600	250	300	3	700	1150	445	555	500	600	160	285	745	1765	395	395	8-M20x400	8-120x120x400
F-TXC449T300U4B	2600	250	300	3	700	1150	445	555	500	600	160	285	745	1765	395	395	8-M20x400	8-120x120x400
F-TXC586/7T350U4B	2800	275	275	3	750	1200	505	595	500	600	180	305	765	1785	415	415	8-M20x400	8-120x120x400
F-TXC586/7T400U4B	2800	275	275	3	750	1200	505	595	500	600	180	305	765	1785	415	415	8-M20x400	8-120x120x400
F-TXC586/7T450U4B	2800	275	275	3	750	1200	505	595	500	600	180	305	765	1785	415	415	8-M20x400	8-120x120x400

The force and torque of the pipe

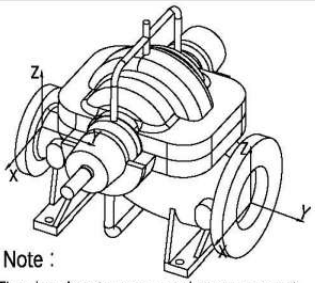

Note :

The pipe close to pump need proper support, Gravity from the inlet and outlet lines shall not be borne by the pump。

Pump Flange	Unit	Axial Direction		
		Fx	Fy	Fz
Inlet (8 INCH)	Pound	850	1100	700
Outlet (6 INCH)	Pound	560	700	460
Inlet (DN 200)	Newton	3780	4890	3110
Outlet (DN 150)	Newton	2490	3110	2050
Pump Flange	**Unit**	**Axial Direction**		
		Mx	My	Mz
Inlet (8 INCH)	Pound-Feet	2600	1300	1900
Outlet (6 INCH)	Pound-Feet	1700	870	1300
Inlet (DN 200)	Newton-meter	3530	1760	2580
Outlet (DN 150)	Newton-meter	2300	1180	1760

Flange specification

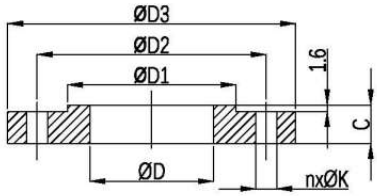

ANSI B16.1 250 Lb RF	ØD	ØD1	ØD2	ØD3	n	ØK	C
Inlet 8 INCH	203.2	303.2	330.2	381.0	12	25.4	41.1
Outlet 6 INCH	154.2	246.1	269.7	317.5	12	22.3	36.5

NOTE : ALL DIMENSIONS AND WEIGHTS ARE PRELIMINARY NOT FOR CONSTRUCTION USE. CERTIFIED AS BUILT DRAWINGS ARE AVAILABLE UPON REQUEST.

The contents of this publication must not be regarded as binding. EBARA ENGINEERING SINGAPORE PTE. LTD. reserves the right to effect any modification it deems necessary, without prior notice.

OUTLINE DIMENSIONS - SINGLE STAGE

ELECTRIC MOTOR DRIVEN FIRE PUMP SETS

CNPA250-200-350

UL LISTED FM APPROVED

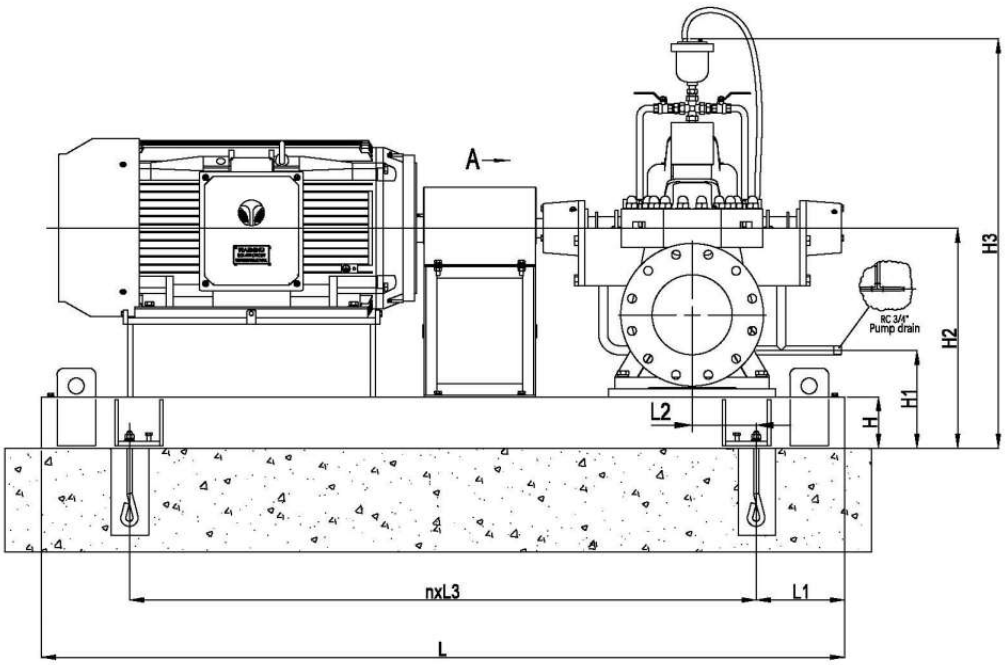

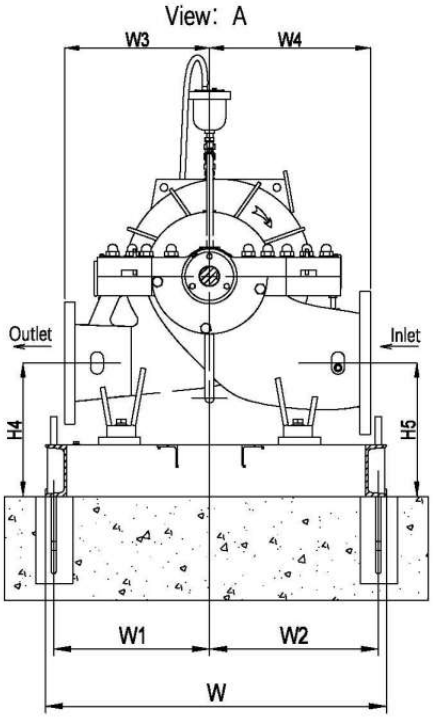

Motor model	Dimensions (Unit:mm)																Anchor bolt	Anchor bolt box
	L	L1	L2	n	L3	W	W1	W2	W3	W4	H	H1	H2	H3	H4	H5		
F-TDC449TS250U2B	2400	300	200	3	600	1100	500	550	450	500	160	245	685	1275	415	415	8-M20x400	8-120x120x400
F-TXC449TS250U2B	2400	300	200	3	600	1100	500	550	450	500	160	245	685	1275	415	415	8-M20x400	8-120x120x400
F-TDC447TS300U2B	2400	300	200	3	600	1100	500	550	450	500	160	245	685	1275	415	415	8-M20x400	8-120x120x400
F-TDC447TS350U2B	2400	300	200	3	600	1100	500	550	450	500	160	245	685	1275	415	415	8-M20x400	8-120x120x400
F-TXC449TS300U2B	2400	300	200	3	600	1100	500	550	450	500	160	245	685	1275	415	415	8-M20x400	8-120x120x400
F-TDC449TS350U2B	2400	300	200	3	600	1100	500	550	450	500	160	245	685	1275	415	415	8-M20x400	8-120x120x400
F-TXC586/7TS350U2B	2700	300	200	3	700	1250	575	625	450	500	160	245	685	1275	415	415	8-M20x400	8-120x120x400
F-TDC449TS400U2B	2400	300	200	3	600	1100	500	550	450	500	160	245	685	1275	415	415	8-M20x400	8-120x120x400
F-TXC586/7TS400U2B	2700	300	200	3	700	1250	575	625	450	500	160	245	685	1275	415	415	8-M20x400	8-120x120x400
F-TXC586/7TS450U2B	2700	300	200	3	700	1250	575	625	450	500	160	245	685	1275	415	415	8-M20x400	8-120x120x400

The force and torque of the pipe

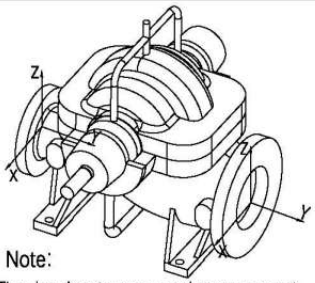

Note:

The pipe close to pump need proper support, Gravity from the inlet and outlet lines shall not be borne by the pump。

Pump Flange	Unit	Axial Direction		
		Fx	Fy	Fz
Inlet (10 INCH)	Pound	1200	1500	1000
Outlet (8 INCH)	Pound	850	1100	700
Inlet (DN 250)	Newton	5340	6670	4450
Outlet (DN 200)	Newton	3780	4890	3110
Pump Flange	Unit	Axial Direction		
		Mx	My	Mz
Inlet (10 INCH)	Pound-Feet	3700	1800	2800
Outlet (8 INCH)	Pound-Feet	2600	1300	1900
Inlet (DN 250)	Newton-meter	5020	2440	3800
Outlet (DN 200)	Newton-meter	3530	1760	2580

Flange specification

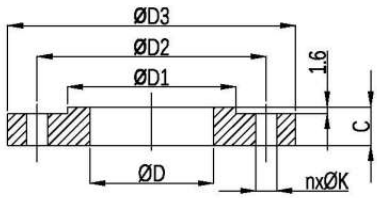

ANSI B16.1 250 Lb RF	ØD	ØD1	ØD2	ØD3	n	ØK	C
Inlet 10 INCH	254.5	357.1	387.3	444.5	16	28.4	47.7
Outlet 8 INCH	203.2	303.2	330.2	381.0	12	25.4	41.1

NOTE : ALL DIMENSIONS AND WEIGHTS ARE PRELIMINARY NOT FOR CONSTRUCTION USE. CERTIFIED AS BUILT DRAWINGS ARE AVAILABLE UPON REQUEST.

The contents of this publication must not be regarded as binding. EBARA ENGINEERING SINGAPORE PTE. LTD. reserves the right to effect any modification it deems necessary, without prior notice.

OUTLINE DIMENSIONS - SINGLE STAGE

ELECTRIC MOTOR DRIVEN FIRE PUMP SETS

CNPA250-200-450

UL LISTED FM APPROVED

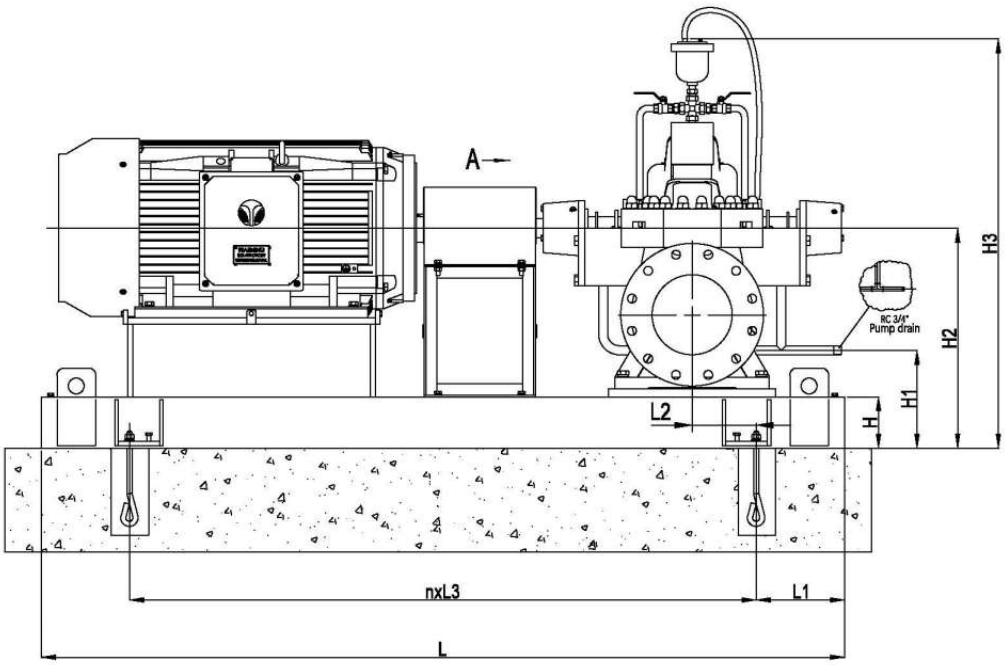

View : A

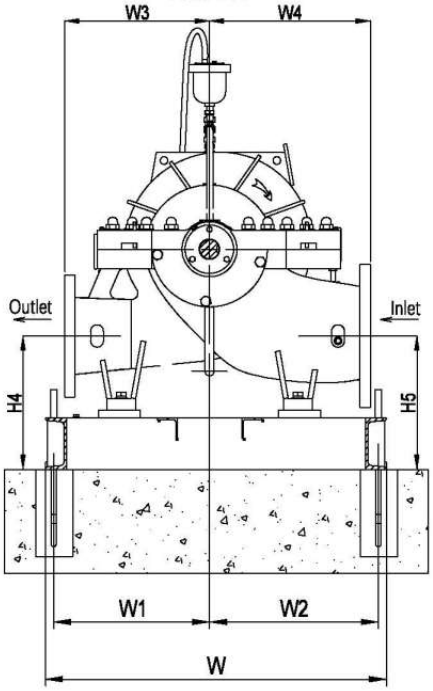

Motor model	Dimensions (Unit:mm)																Anchor bolt	Anchor bolt box
	L	L1	L2	n	L3	W	W1	W2	W3	W4	H	H1	H2	H3	H4	H5		
F-TDC447T250U4B	2300	250	200	3	600	1100	475	575	400	500	160	245	705	1300	425	425	8-M20x400	8-120x120x400
F-TXC449T250U4B	2400	300	150	3	600	1100	475	575	400	500	160	245	705	1300	425	425	8-M20x400	8-120x120x400
F-TDC449T300U4B	2300	250	200	3	600	1100	475	575	400	500	160	245	705	1300	425	425	8-M20x400	8-120x120x400
F-TXC449T300U4B	2400	300	150	3	600	1100	475	575	400	500	160	245	705	1300	425	425	8-M20x400	8-120x120x400
F-TDC449T350U4B	2300	250	200	3	600	1100	475	575	400	500	160	245	705	1300	425	425	8-M20x400	8-120x120x400
F-TXC586/7T350U4B	2700	300	150	3	700	1200	475	675	400	500	160	245	705	1300	425	425	8-M20x400	8-120x120x400

The force and torque of the pipe

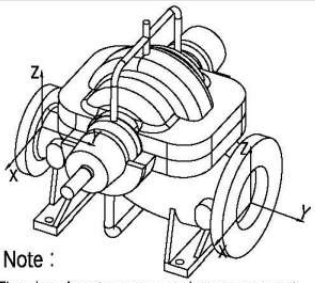

Note :

The pipe close to pump need proper support, Gravity from the inlet and outlet lines shall not be borne by the pump。

Pump Flange	Unit	Axial Direction		
		Fx	Fy	Fz
Inlet (10 INCH)	Pound	1200	1500	1000
Outlet (8 INCH)	Pound	850	1100	700
Inlet (DN 250)	Newton	5340	6670	4450
Outlet (DN 200)	Newton	3780	4890	3110
Pump Flange	**Unit**	**Axial Direction**		
		Mx	My	Mz
Inlet (10 INCH)	Pound-Feet	3700	1800	2800
Outlet (8 INCH)	Pound-Feet	2600	1300	1900
Inlet (DN 250)	Newton-meter	5020	2440	3800
Outlet (DN 200)	Newton-meter	3530	1760	2580

Flange specification

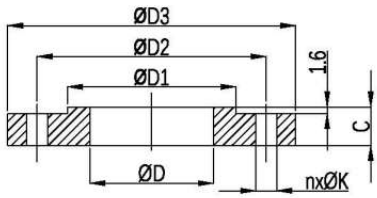

ANSI B16.1 250 Lb RF	ØD	ØD1	ØD2	ØD3	n	ØK	C
Inlet 10 INCH	254.5	357.1	387.3	444.5	16	28.4	47.7
Outlet 8 INCH	203.2	303.2	330.2	381.0	12	25.4	41.1

NOTE : ALL DIMENSIONS AND WEIGHTS ARE PRELIMINARY NOT FOR CONSTRUCTION USE. CERTIFIED AS BUILT DRAWINGS ARE AVAILABLE UPON REQUEST.

The contents of this publication must not be regarded as binding. EBARA ENGINEERING SINGAPORE PTE. LTD. reserves the right to effect any modification it deems necessary, without prior notice.

OUTLINE DIMENSIONS - SINGLE STAGE

ELECTRIC MOTOR DRIVEN FIRE PUMP SETS

CNPA250-200-500

UL LISTED FM APPROVED

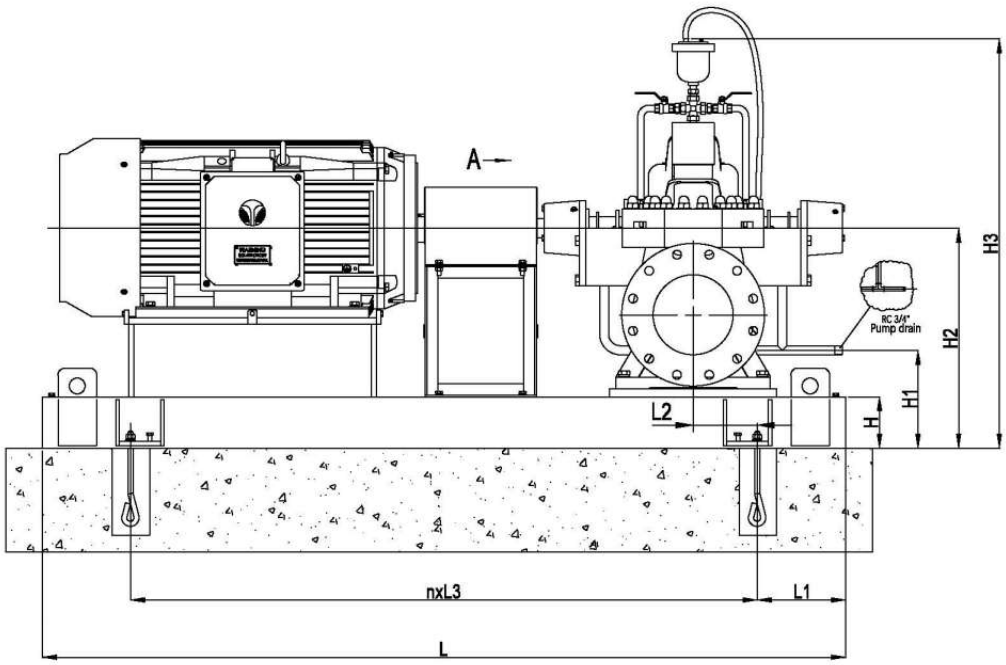

View : A

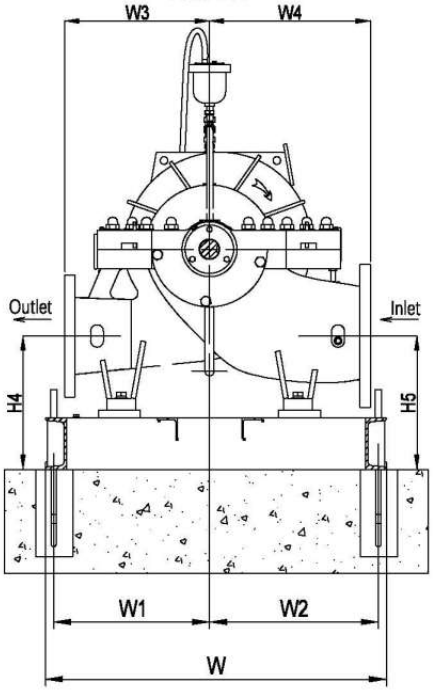

Motor model	Dimensions (Unit:mm)																Anchor bolt	Anchor bolt box
	L	L1	L2	n	L3	W	W1	W2	W3	W4	H	H1	H2	H3	H4	H5		
F-TDC445T200U4B	2400	300	220	3	600	1100	475	575	450	550	160	255	735	1315	425	425	8-M20x400	8-120x120x400
F-TXC447T200U4B	2700	300	220	3	700	1100	475	575	450	550	160	255	735	1315	425	425	8-M20x400	8-120x120x400
F-TDC447T250U4B	2500	275	245	3	650	1100	475	575	450	550	160	255	735	1315	425	425	8-M20x400	8-120x120x400
F-TXC449T250U4B	2700	300	220	3	700	1100	475	575	450	550	160	255	735	1315	425	425	8-M20x400	8-120x120x400
F-TDC449T300U4B	2500	275	245	3	650	1100	475	575	450	550	160	255	735	1315	425	425	8-M20x400	8-120x120x400
F-TXC449T300U4B	2700	300	220	3	700	1100	475	575	450	550	160	255	735	1315	425	425	8-M20x400	8-120x120x400
F-TDC449T350U4B	2500	275	245	3	650	1100	475	575	450	550	160	255	735	1315	425	425	8-M20x400	8-120x120x400
F-TXC586/7T350U4B	3000	300	220	3	800	1300	575	675	450	550	160	255	735	1315	425	425	8-M20x400	8-120x120x400
F-TXC586/7T400U4B	3000	300	220	3	800	1300	575	675	450	550	160	255	735	1315	425	425	8-M20x400	8-120x120x400
F-TXC586/7T450U4B	3000	300	220	3	800	1300	575	675	450	550	160	255	735	1315	425	425	8-M20x400	8-120x120x400

The force and torque of the pipe

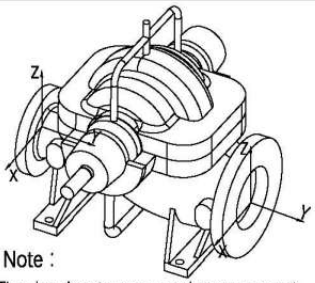

Note :

The pipe close to pump need proper support, Gravity from the inlet and outlet lines shall not be borne by the pump。

Pump Flange	Unit	Axial Direction		
		Fx	Fy	Fz
Inlet (10 INCH)	Pound	1200	1500	1000
Outlet (8 INCH)	Pound	850	1100	700
Inlet (DN 250)	Newton	5340	6670	4450
Outlet (DN 200)	Newton	3780	4890	3110
Pump Flange	Unit	Axial Direction		
		Mx	My	Mz
Inlet (10 INCH)	Pound-Feet	3700	1800	2800
Outlet (8 INCH)	Pound-Feet	2600	1300	1900
Inlet (DN 250)	Newton-meter	5020	2440	3800
Outlet (DN 200)	Newton-meter	3530	1760	2580

Flange specification

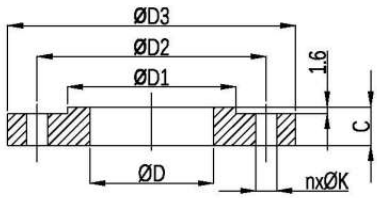

ANSI B16.1 250 Lb RF	ØD	ØD1	ØD2	ØD3	n	ØK	C
Inlet 10 INCH	254.5	357.1	387.3	444.5	16	28.4	47.7
Outlet 8 INCH	203.2	303.2	330.2	381.0	12	25.4	41.1

NOTE : ALL DIMENSIONS AND WEIGHTS ARE PRELIMINARY NOT FOR CONSTRUCTION USE. CERTIFIED AS BUILT DRAWINGS ARE AVAILABLE UPON REQUEST.

The contents of this publication must not be regarded as binding. EBARA ENGINEERING SINGAPORE PTE. LTD. reserves the right to effect any modification it deems necessary, without prior notice.

OUTLINE DIMENSIONS - SINGLE STAGE

ELECTRIC MOTOR DRIVEN FIRE PUMP SETS

CNPA250-200-500S

UL LISTED FM APPROVED

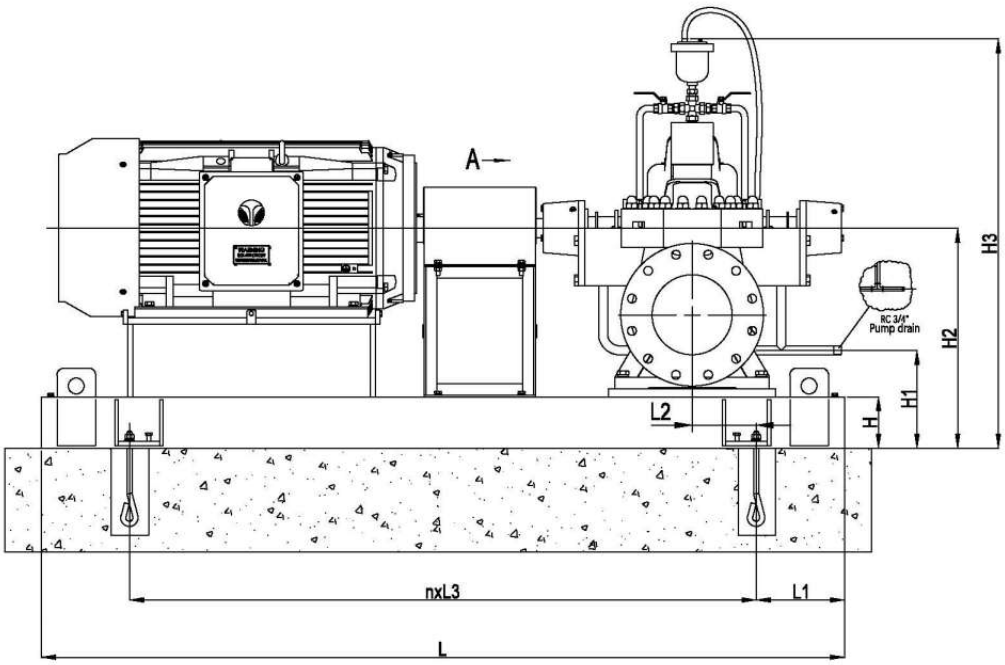

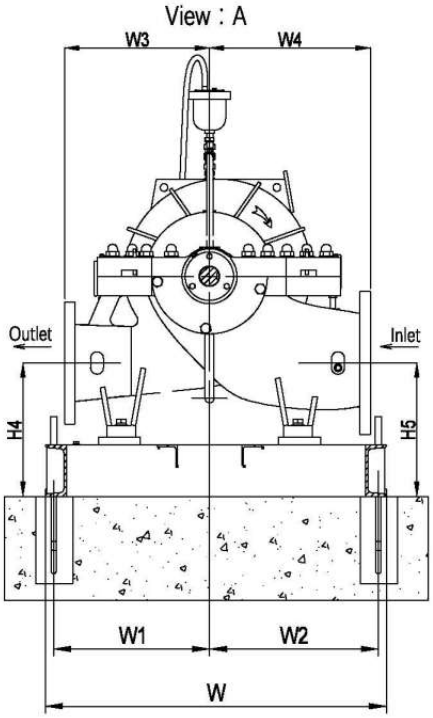

Motor model	Dimensions (Unit:mm)																Anchor bolt	Anchor bolt box
	L	L1	L2	n	L3	W	W1	W2	W3	W4	H	H1	H2	H3	H4	H5		
F-TDC445T200U4B	2400	300	220	3	600	1100	475	575	450	550	160	255	735	1315	425	425	8-M20x400	8-120x120x400
F-TXC447T200U4B	2700	300	220	3	700	1100	475	575	450	550	160	255	735	1315	425	425	8-M20x400	8-120x120x400
F-TDC447T250U4B	2500	275	245	3	650	1100	475	575	450	550	160	255	735	1315	425	425	8-M20x400	8-120x120x400
F-TXC449T250U4B	2700	300	220	3	700	1100	475	575	450	550	160	255	735	1315	425	425	8-M20x400	8-120x120x400
F-TDC449T300U4B	2500	275	245	3	650	1100	475	575	450	550	160	255	735	1315	425	425	8-M20x400	8-120x120x400
F-TXC449T300U4B	2700	300	220	3	700	1100	475	575	450	550	160	255	735	1315	425	425	8-M20x400	8-120x120x400
F-TDC449T350U4B	2500	275	245	3	650	1100	475	575	450	550	160	255	735	1315	425	425	8-M20x400	8-120x120x400
F-TXC586/7T350U4B	3000	300	220	3	800	1300	575	675	450	550	160	255	735	1315	425	425	8-M20x400	8-120x120x400
F-TXC586/7T400U4B	3000	300	220	3	800	1300	575	675	450	550	160	255	735	1315	425	425	8-M20x400	8-120x120x400
F-TXC586/7T450U4B	3000	300	220	3	800	1300	575	675	450	550	160	255	735	1315	425	425	8-M20x400	8-120x120x400

The force and torque of the pipe

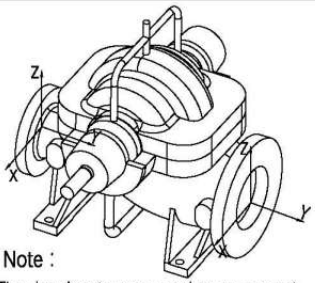

Note :

The pipe close to pump need proper support, Gravity from the inlet and outlet lines shall not be borne by the pump。

Pump Flange	Unit	Axial Direction		
		Fx	Fy	Fz
Inlet (10 INCH)	Pound	1200	1500	1000
Outlet (8 INCH)	Pound	850	1100	700
Inlet (DN 250)	Newton	5340	6670	4450
Outlet (DN 200)	Newton	3780	4890	3110
Pump Flange	Unit	Axial Direction		
		Mx	My	Mz
Inlet (10 INCH)	Pound-Feet	3700	1800	2800
Outlet (8 INCH)	Pound-Feet	2600	1300	1900
Inlet (DN 250)	Newton-meter	5020	2440	3800
Outlet (DN 200)	Newton-meter	3530	1760	2580

Flange specification

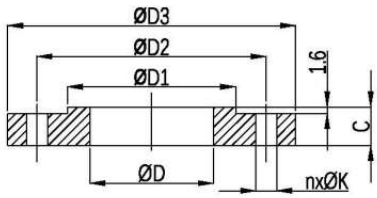

ANSI B16.1 250 Lb RF	ØD	ØD1	ØD2	ØD3	n	ØK	C
Inlet 10 INCH	254.5	357.1	387.3	444.5	16	28.4	47.7
Outlet 8 INCH	203.2	303.2	330.2	381.0	12	25.4	41.1

NOTE : ALL DIMENSIONS AND WEIGHTS ARE PRELIMINARY NOT FOR CONSTRUCTION USE. CERTIFIED AS BUILT DRAWINGS ARE AVAILABLE UPON REQUEST.

The contents of this publication must not be regarded as binding. EBARA ENGINEERING SINGAPORE PTE. LTD. reserves the right to effect any modification it deems necessary, without prior notice.

OUTLINE DIMENSIONS - SINGLE STAGE

ELECTRIC MOTOR DRIVEN FIRE PUMP SETS

CNPA250-200-600

UL LISTED FM APPROVED

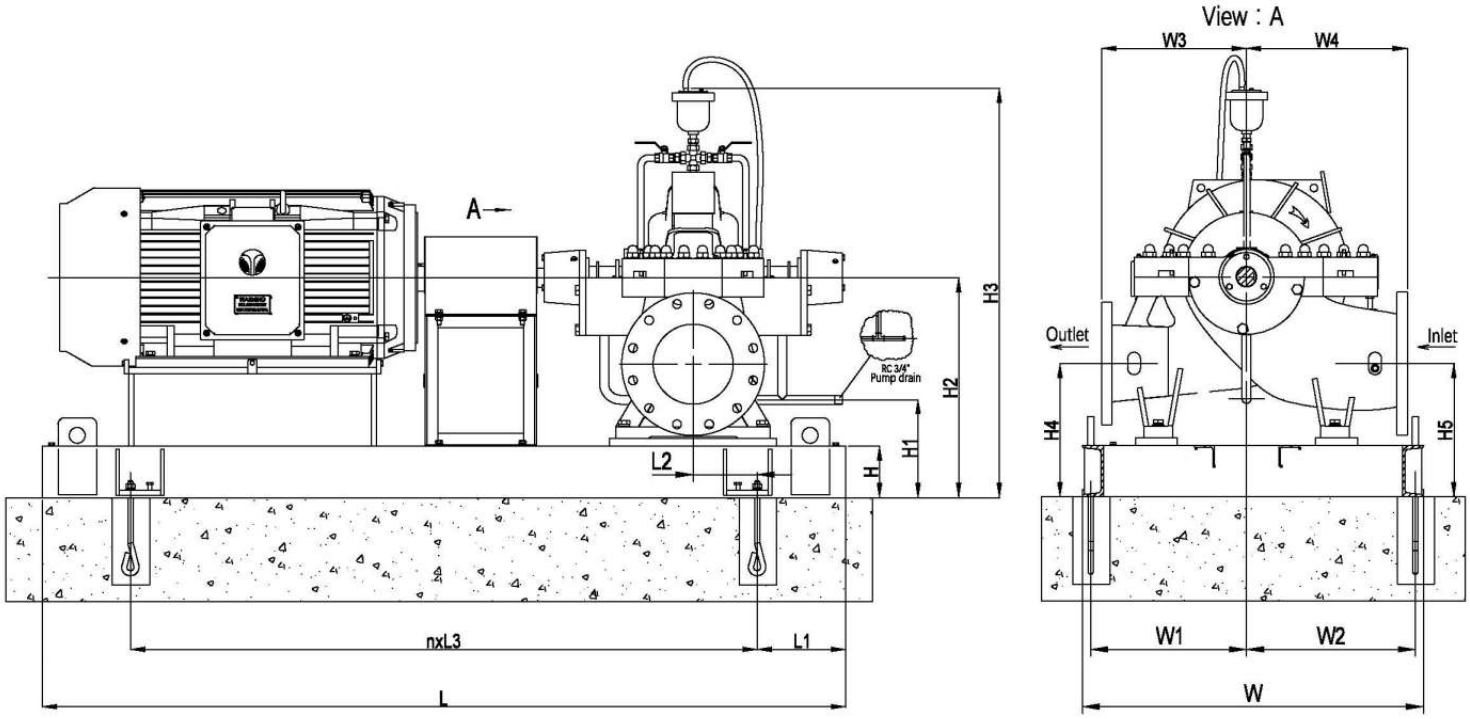

Motor model	Dimensions (Unit:mm)																Anchor bolt	Anchor bolt box
	L	L1	L2	n	L3	W	W1	W2	W3	W4	H	H1	H2	H3	H4	H5		
F-TDC449T300U4B	2500	275	275	3	650	1200	525	625	500	600	160	265	775	1420	425	425	8-M20x400	8-120x120x400
F-TXC449T300U4B	2700	300	250	3	700	1200	525	625	500	600	160	265	775	1420	425	425	8-M20x400	8-120x120x400
F-TDC449T350U4B	2500	275	275	3	650	1200	525	625	500	600	160	265	775	1420	425	425	8-M20x400	8-120x120x400
F-TXC586/7T350U4B	3100	275	275	3	850	1300	525	725	500	600	160	265	775	1420	425	425	8-M20x400	8-120x120x400
F-TXC586/7T400U4B	3100	275	275	3	850	1300	525	725	500	600	160	265	775	1420	425	425	8-M20x400	8-120x120x400
TXC586/7T450U4B	3100	275	275	3	850	1300	525	725	500	600	160	265	775	1420	425	425	8-M20x400	8-120x120x400

The force and torque of the pipe

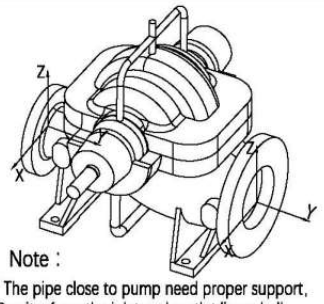

Note :

The pipe close to pump need proper support, Gravity from the inlet and outlet lines shall not be borne by the pump。

Pump Flange	Unit	Axial Direction		
		Fx	Fy	Fz
Inlet (10 INCH)	Pound	1200	1500	1000
Outlet (8 INCH)	Pound	850	1100	700
Inlet (DN 250)	Newton	5340	6670	4450
Outlet (DN 200)	Newton	3780	4890	3110
Pump Flange	**Unit**	**Axial Direction**		
		Mx	My	Mz
Inlet (10 INCH)	Pound-Feet	3700	1800	2800
Outlet (8 INCH)	Pound-Feet	2600	1300	1900
Inlet (DN 250)	Newton-meter	5020	2440	3800
Outlet (DN 200)	Newton-meter	3530	1760	2580

Flange specification

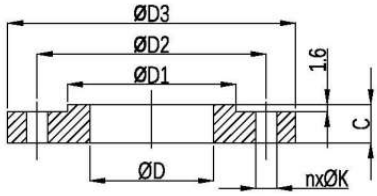

ANSI B16.1 250 Lb RF	ØD	ØD1	ØD2	ØD3	n	ØK	C
Inlet 10 INCH	254.5	357.1	387.3	444.5	16	28.4	47.7
Outlet 8 INCH	203.2	303.2	330.2	381.0	12	25.4	41.1

NOTE : ALL DIMENSIONS AND WEIGHTS ARE PRELIMINARY NOT FOR CONSTRUCTION USE. CERTIFIED AS BUILT DRAWINGS ARE AVAILABLE UPON REQUEST.

The contents of this publication must not be regarded as binding. EBARA ENGINEERING SINGAPORE PTE. LTD. reserves the right to effect any modification it deems necessary, without prior notice.

OUTLINE DIMENSIONS - SINGLE STAGE

ELECTRIC MOTOR DRIVEN FIRE PUMP SETS

CNPA300-250-500

UL LISTED FM APPROVED

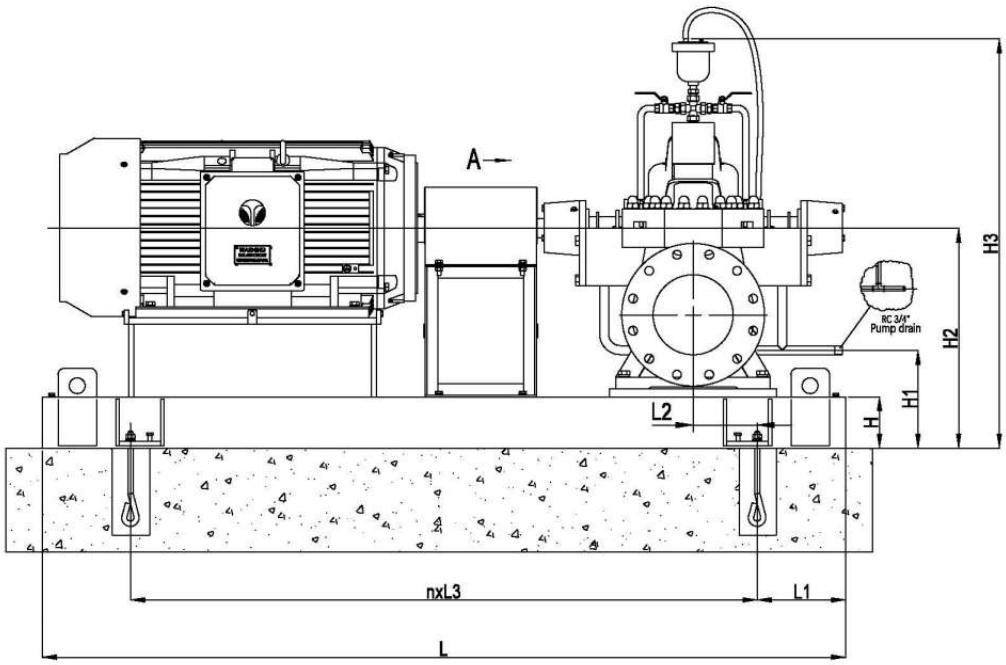

View : A

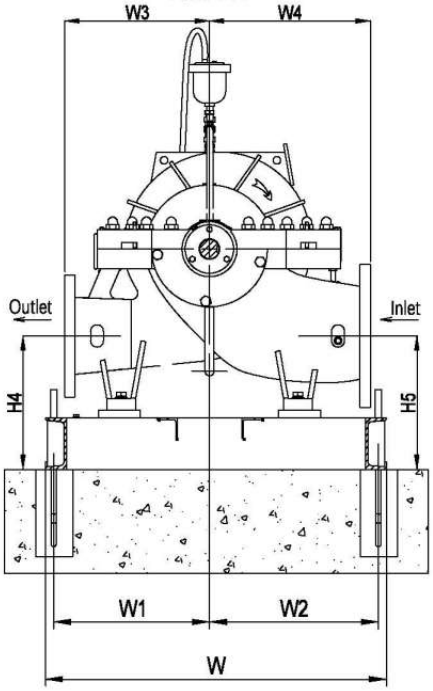

Motor model	Dimensions (Unit:mm)																Anchor bolt	Anchor bolt box
	L	L1	L2	n	L3	W	W1	W2	W3	W4	H	H1	H2	H3	H4	H5		
F-TDC449T350U4B	2700	240	390	3	740	1300	575	675	550	650	160	265	860	1507	430	430	8-M20x400	8-120x120x400
F-TXC586/7T350U4B	3100	275	355	3	850	1300	575	675	550	650	160	265	860	1507	430	430	8-M20x400	8-120x120x400
F-TXC586/7T400U4B	3100	275	355	3	850	1300	575	675	550	650	160	265	860	1507	430	430	8-M20x400	8-120x120x400
F-TXC586/7T450U4B	3100	275	355	3	850	1300	575	675	550	650	160	265	860	1507	430	430	8-M20x400	8-120x120x400
TXC586/7T500U4B	3100	275	355	3	850	1300	575	675	550	650	160	265	860	1507	430	430	8-M20x400	8-120x120x400

The force and torque of the pipe

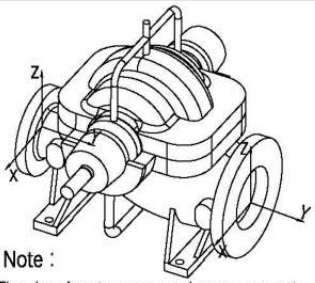

Note :

The pipe close to pump need proper support, Gravity from the inlet and outlet lines shall not be borne by the pump。

Pump Flange	Unit	Axial Direction		
		Fx	Fy	Fz
Inlet (12 INCH)	Pound	1500	1800	1200
Outlet (10 INCH)	Pound	1200	1500	1000
Inlet (DN 300)	Newton	6670	8000	5340
Outlet (DN 250)	Newton	5340	6670	4450
Pump Flange	Unit	Axial Direction		
		Mx	My	Mz
Inlet (12 INCH)	Pound-Feet	4500	2200	3400
Outlet (10 INCH)	Pound-Feet	3700	1800	2800
Inlet (DN 300)	Newton-meter	6100	2980	4610
Outlet (DN 250)	Newton-meter	5020	2440	3800

Flange specification

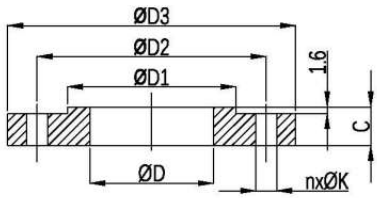

ANSI B16.1 250 Lb RF	ØD	ØD1	ØD2	ØD3	n	ØK	C
Inlet 12 INCH	304.8	417.6	450.8	520.7	16	31.7	50.8
Outlet 10 INCH	254.5	357.1	387.3	444.5	16	28.4	47.7

NOTE : ALL DIMENSIONS AND WEIGHTS ARE PRELIMINARY NOT FOR CONSTRUCTION USE. CERTIFIED AS BUILT DRAWINGS ARE AVAILABLE UPON REQUEST.

The contents of this publication must not be regarded as binding. EBARA ENGINEERING SINGAPORE PTE. LTD. reserves the right to effect any modification it deems necessary, without prior notice.

OUTLINE DIMENSIONS - SINGLE STAGE

ELECTRIC MOTOR DRIVEN FIRE PUMP SETS

CNPA300-250-600

UL LISTED FM APPROVED

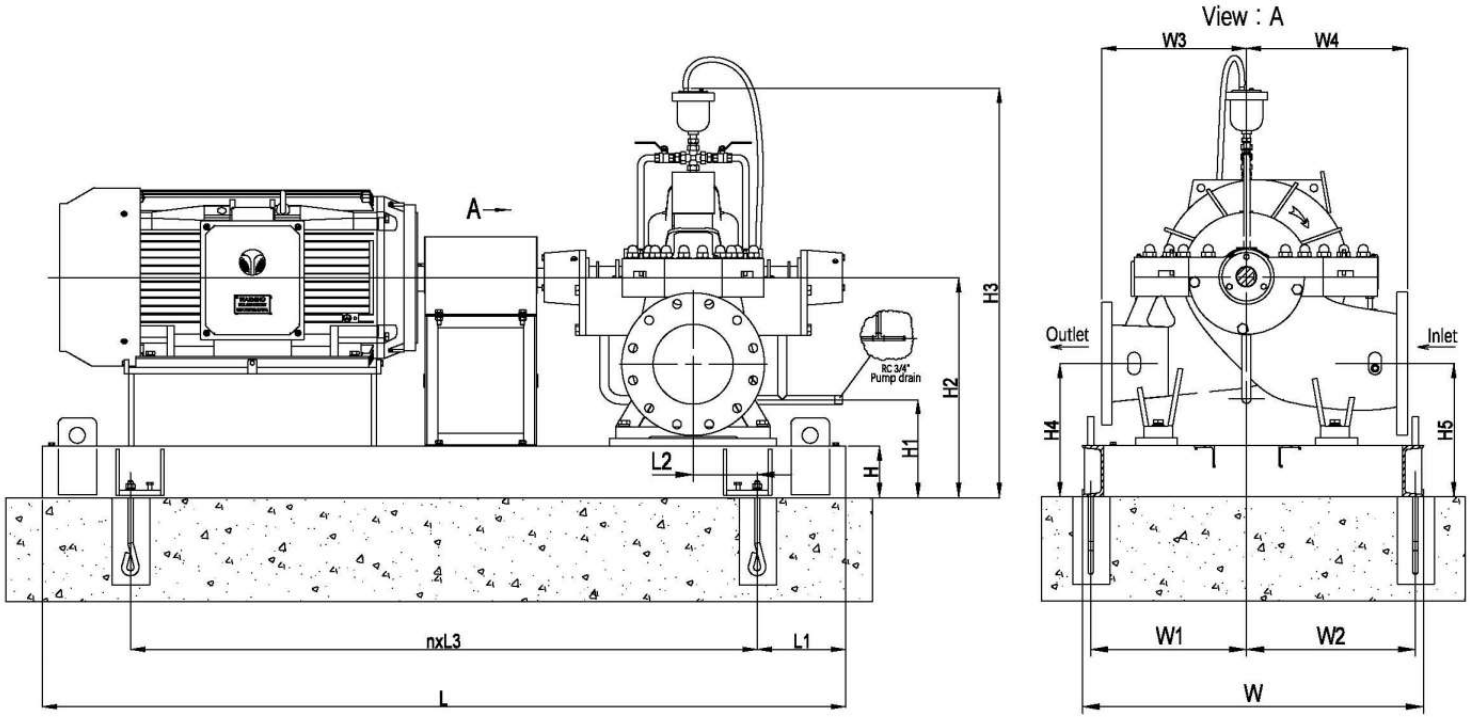

Motor model	Dimensions (Unit:mm)																Anchor bolt	Anchor bolt box
	L	L1	L2	n	L3	W	W1	W2	W3	W4	H	H1	H2	H3	H4	H5		
TXC586/7T500U4B	2700	240	390	3	740	1300	575	675	550	650	160	265	860	1507	430	430	8-M20x400	8-120x120x400

The force and torque of the pipe

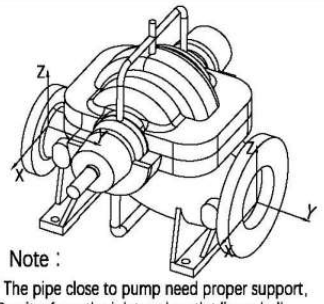

Note :

The pipe close to pump need proper support, Gravity from the inlet and outlet lines shall not be borne by the pump。

Pump Flange	Unit	Axial Direction		
		Fx	Fy	Fz
Inlet (12 INCH)	Pound	1500	1800	1200
Outlet (10 INCH)	Pound	1200	1500	1000
Inlet (DN 300)	Newton	6670	8000	5340
Outlet (DN 250)	Newton	5340	6670	4450
Pump Flange	Unit	Axial Direction		
		Mx	My	Mz
Inlet (12 INCH)	Pound-Feet	4500	2200	3400
Outlet (10 INCH)	Pound-Feet	3700	1800	2800
Inlet (DN 300)	Newton-meter	6100	2980	4610
Outlet (DN 250)	Newton-meter	5020	2440	3800

Flange specification

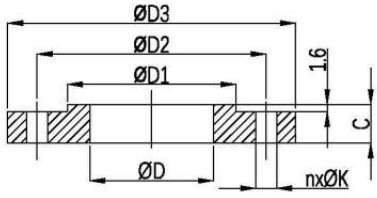

ANSI B16.1 250 Lb RF	ØD	ØD1	ØD2	ØD3	n	ØK	C
Inlet 12 INCH	304.8	417.6	450.8	520.7	16	31.7	50.8
Outlet 10 INCH	254.5	357.1	387.3	444.5	16	28.4	47.7

NOTE : ALL DIMENSIONS AND WEIGHTS ARE PRELIMINARY NOT FOR CONSTRUCTION USE. CERTIFIED AS BUILT DRAWINGS ARE AVAILABLE UPON REQUEST.

The contents of this publication must not be regarded as binding. EBARA ENGINEERING SINGAPORE PTE. LTD. reserves the right to effect any modification it deems necessary, without prior notice.

OUTLINE DIMENSIONS - SINGLE STAGE

DIESEL ENGINE DRIVEN FIRE PUMP SETS

CNPA100-80-200

UL LISTED FM APPROVED

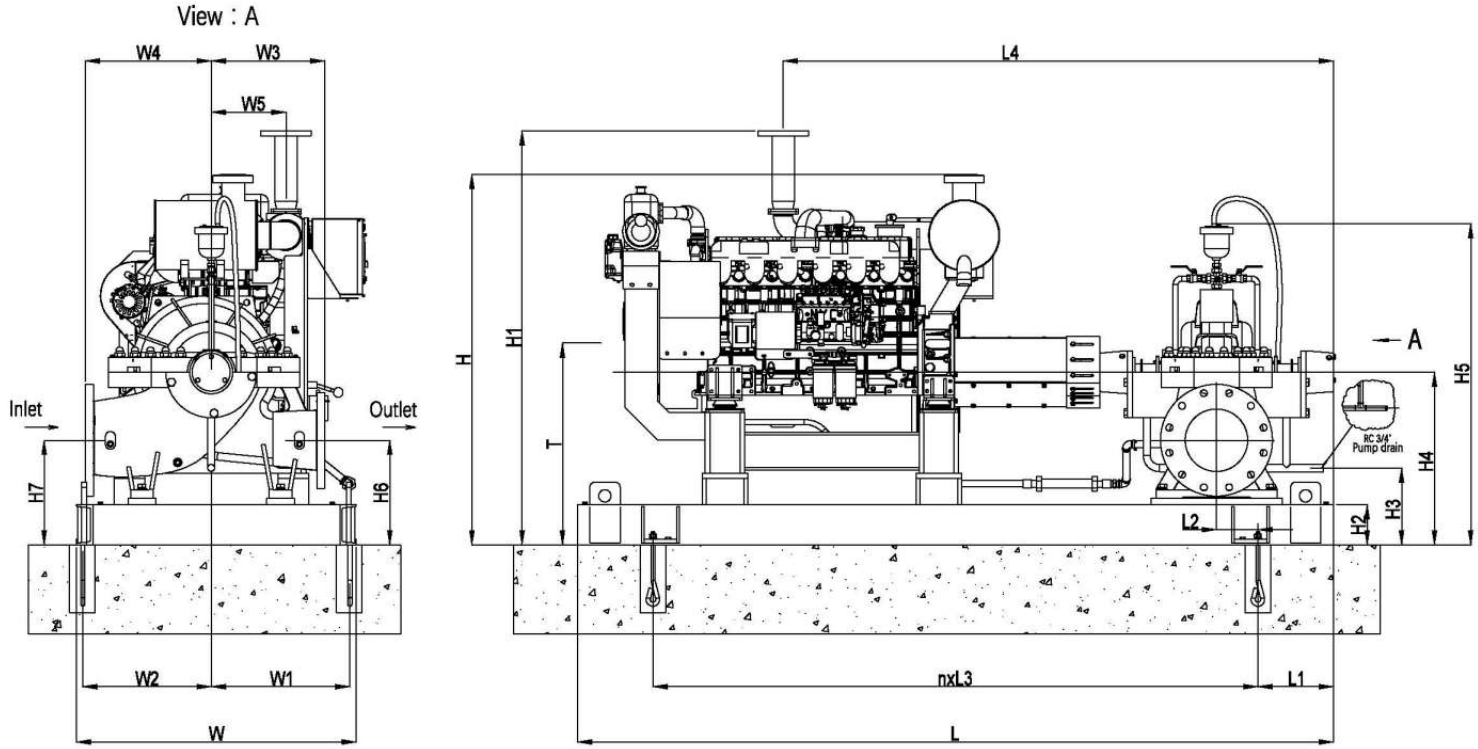

Diesel engine	Dimensions (Unit:mm)																					Anchor bolt	Anchor bolt box
	L	L1	L2	n	L3	L4	W	W1	W2	W3	W4	W5	H	H1	H2	H3	H4	H5	H6	H7	T①		
NM4-90	2050	200	110	2	825	1465	1000	600	350	230	270	297	1125	1166	120	225	470	960	340	340	608	6-M16x300	6-120x120x300
NM4-90B	2050	200	110	2	825	1465	1000	600	350	230	270	297	1125	1166	120	225	470	960	340	340	608	6-M16x300	6-120x120x300

①: Oil pump benchmark

The force and torque of the pipe

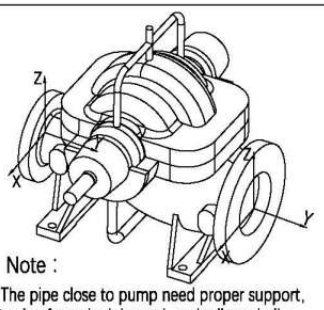

Note :

The pipe close to pump need proper support, Gravity from the inlet and outlet lines shall not be borne by the pump。

Pump Flange	Unit	Axial Direction		
		Fx	Fy	Fz
Inlet (4 INCH)	Pound	320	400	260
Outlet (3 INCH)	Pound	240	300	200
Inlet (DN 100)	Newton	1420	1780	1160
Outlet (DN 80)	Newton	1070	1330	890
Pump Flange	Unit	Axial Direction		
		Mx	My	Mz
Inlet (4 INCH)	Pound-Feet	980	500	740
Outlet (3 INCH)	Pound-Feet	700	350	530
Inlet (DN 150)	Newton-meter	1330	680	1000
Outlet (DN 80)	Newton-meter	950	470	720

Flange specification

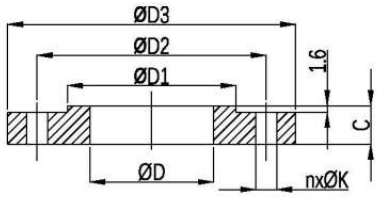

ANSI B16.1 250 Lb RF	ØD	ØD1	ØD2	ØD3	n	ØK	C
Inlet 4 INCH	101.5	176.3	200.1	254.0	8	22.3	31.7
Outlet 3 INCH	76.2	144.5	168.1	209.1	8	22.3	28.4

NOTE : ALL DIMENSIONS AND WEIGHTS ARE PRELIMINARY NOT FOR CONSTRUCTION USE. CERTIFIED AS BUILT DRAWINGS ARE AVAILABLE UPON REQUEST.

The contents of this publication must not be regarded as binding. EBARA ENGINEERING SINGAPORE PTE. LTD. reserves the right to effect any modification it deems necessary, without prior notice.

OUTLINE DIMENSIONS - SINGLE STAGE

DIESEL ENGINE DRIVEN FIRE PUMP SETS

CNPA100-80-250

UL LISTED FM APPROVED

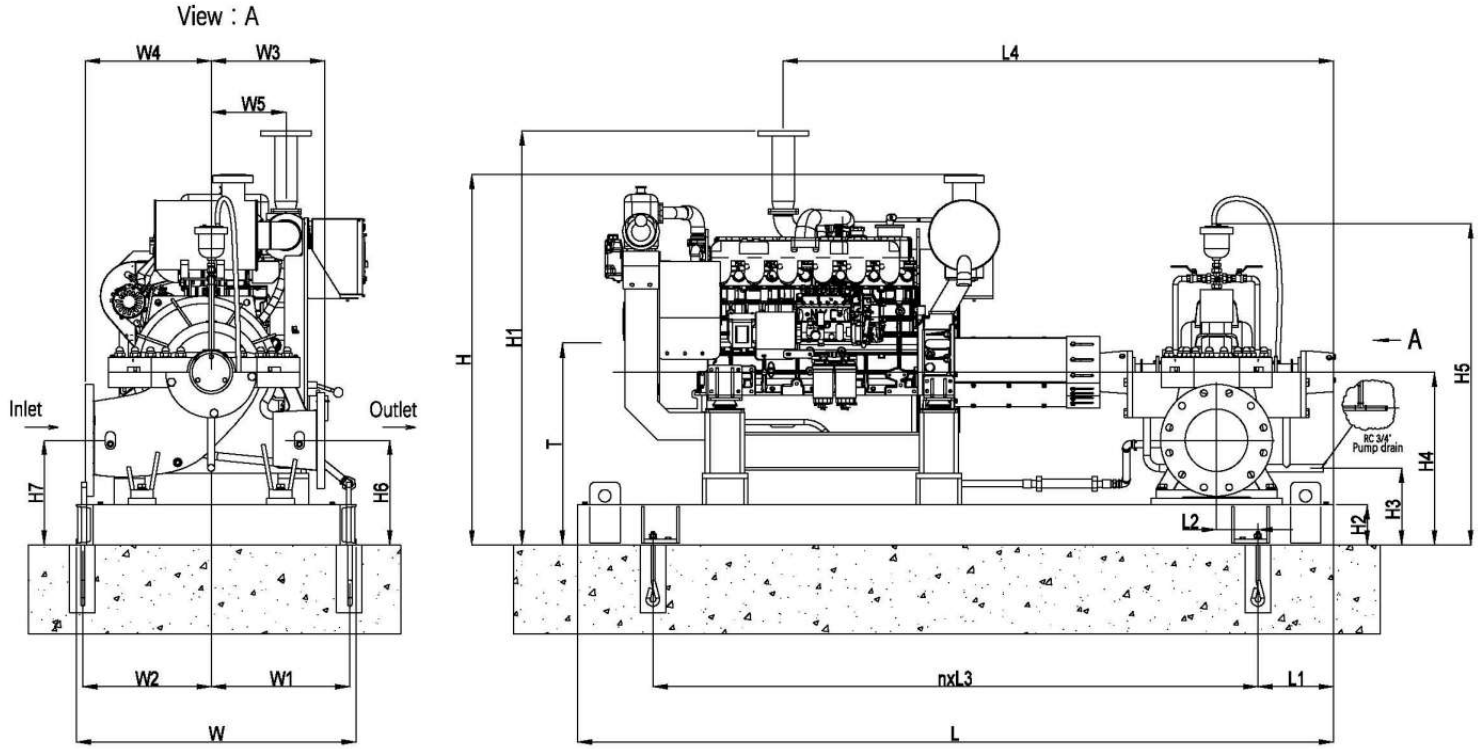

Diesel engine	Dimensions (Unit:mm)																					Anchor bolt	Anchor bolt box
	L	L1	L2	n	L3	L4	W	W1	W2	W3	W4	W5	H	H1	H2	H3	H4	H5	H6	H7	T①		
NM4-90	2050	200	110	2	825	1465	1000	600	350	250	280	297	1125	1166	120	225	470	985	300	300	610	6-M16x300	6-120x120x300
NM4-90B	2050	200	110	2	825	1465	1000	600	350	250	280	297	1125	1166	120	225	470	985	340	340	610	6-M16x300	6-120x120x300
NM4-105	2200	250	60	2	850	1588	1000	600	350	250	280	294	1175	1212	120	225	470	985	340	340	580	6-M16x300	6-120x120x300
NM4-108	2200	250	60	2	850	1588	1000	600	350	250	280	294	1175	1212	120	225	470	985	340	340	580	6-M16x300	6-120x120x300
NM4-102B	2200	250	60	2	850	1415	1000	525	425	250	280	253	1413	1260	120	225	470	985	340	340	640	6-M16x300	6-120x120x300

①: Oil pump benchmark

The force and torque of the pipe

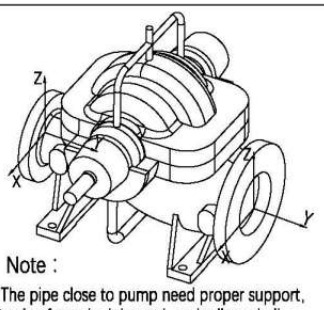

Note :

The pipe close to pump need proper support, Gravity from the inlet and outlet lines shall not be borne by the pump。

Pump Flange	Unit	Axial Direction		
		Fx	Fy	Fz
Inlet (4 INCH)	Pound	320	400	260
Outlet (3 INCH)	Pound	240	300	200
Inlet (DN 100)	Newton	1420	1780	1160
Outlet (DN 80)	Newton	1070	1330	890
Pump Flange	Unit	Axial Direction		
		Mx	My	Mz
Inlet (4 INCH)	Pound-Feet	980	500	740
Outlet (3 INCH)	Pound-Feet	700	350	530
Inlet (DN 150)	Newton-meter	1330	680	1000
Outlet (DN 80)	Newton-meter	950	470	720

Flange specification

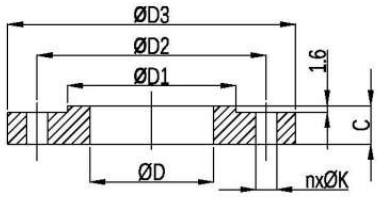

ANSI B16.1 250 Lb RF	ØD	ØD1	ØD2	ØD3	n	ØK	C
Inlet 4 INCH	101.5	176.3	200.1	254.0	8	22.3	31.7
Outlet 3 INCH	76.2	144.5	168.1	209.1	8	22.3	28.4

NOTE : ALL DIMENSIONS AND WEIGHTS ARE PRELIMINARY NOT FOR CONSTRUCTION USE. CERTIFIED AS BUILT DRAWINGS ARE AVAILABLE UPON REQUEST.

The contents of this publication must not be regarded as binding. EBARA ENGINEERING SINGAPORE PTE. LTD. reserves the right to effect any modification it deems necessary, without prior notice.

OUTLINE DIMENSIONS - SINGLE STAGE

DIESEL ENGINE DRIVEN FIRE PUMP SETS

CNPA125-80-200

UL LISTED FM APPROVED

View : A

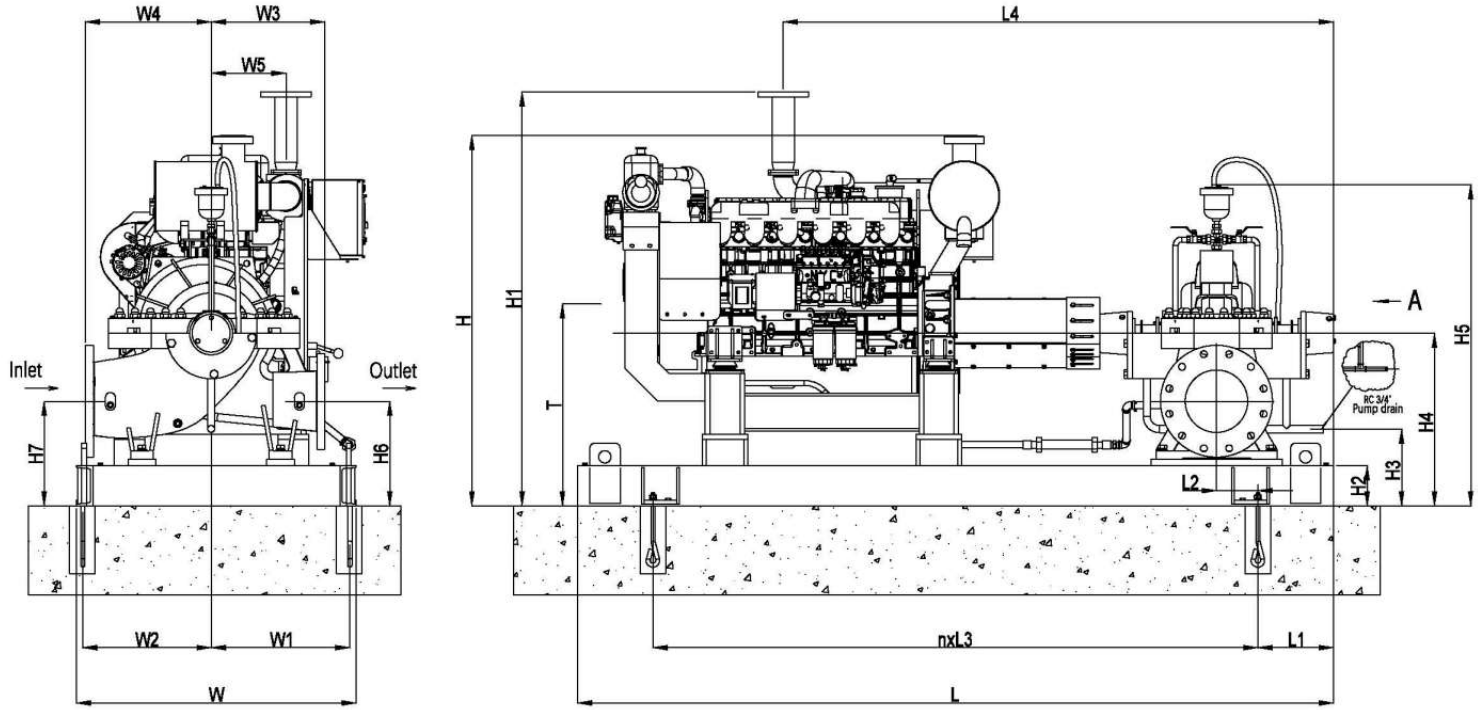

Diesel engine	Dimensions (Unit:mm)																					Anchor bolt	Anchor bolt box
	L	L1	L2	n	L3	L4	W	W1	W2	W3	W4	W5	H	H1	H2	H3	H4	H5	H6	H7	T①		
NM4-90	2050	200	150	2	825	1455	1000	600	350	250	270	272	1120	1162	120	211	465	895	340	315	604	6-M16x300	6-120x120x300
NM4-90B	2050	200	150	2	825	1441	1000	600	350	250	270	222	1162	1162	120	211	465	895	340	315	604	6-M16x300	6-120x120x300

①: Oil pump benchmark

The force and torque of the pipe

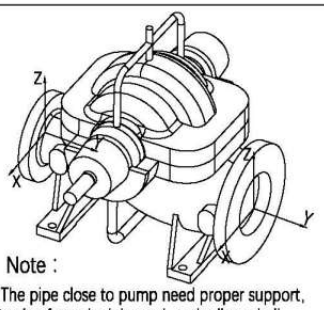

Note :

The pipe close to pump need proper support, Gravity from the inlet and outlet lines shall not be borne by the pump。

Pump Flange	Unit	Axial Direction		
		Fx	Fy	Fz
Inlet (5 INCH)	Pound	560	700	460
Outlet (3 INCH)	Pound	240	300	200
Inlet (DN 125)	Newton	2490	3110	2050
Outlet (DN 80)	Newton	1070	1330	890
Pump Flange	Unit	Axial Direction		
		Mx	My	Mz
Inlet (5 INCH)	Pound-Feet	1700	870	1300
Outlet (3 INCH)	Pound-Feet	700	350	530
Inlet (DN 125)	Newton-meter	2300	1180	1760
Outlet (DN 80)	Newton-meter	950	470	720

Flange specification

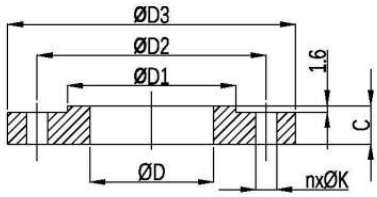

ANSI B16.1 250 Lb RF	ØD	ØD1	ØD2	ØD3	n	ØK	C
Inlet 5 INCH	128.3	211.0	234.9	279.4	8	22.3	35.0
Outlet 3 INCH	76.2	144.5	168.1	209.1	8	22.3	28.4

NOTE : ALL DIMENSIONS AND WEIGHTS ARE PRELIMINARY NOT FOR CONSTRUCTION USE. CERTIFIED AS BUILT DRAWINGS ARE AVAILABLE UPON REQUEST.

The contents of this publication must not be regarded as binding. EBARA ENGINEERING SINGAPORE PTE. LTD. reserves the right to effect any modification it deems necessary, without prior notice.

OUTLINE DIMENSIONS - SINGLE STAGE

DIESEL ENGINE DRIVEN FIRE PUMP SETS

CNPA125-80-250	UL LISTED FM APPROVED

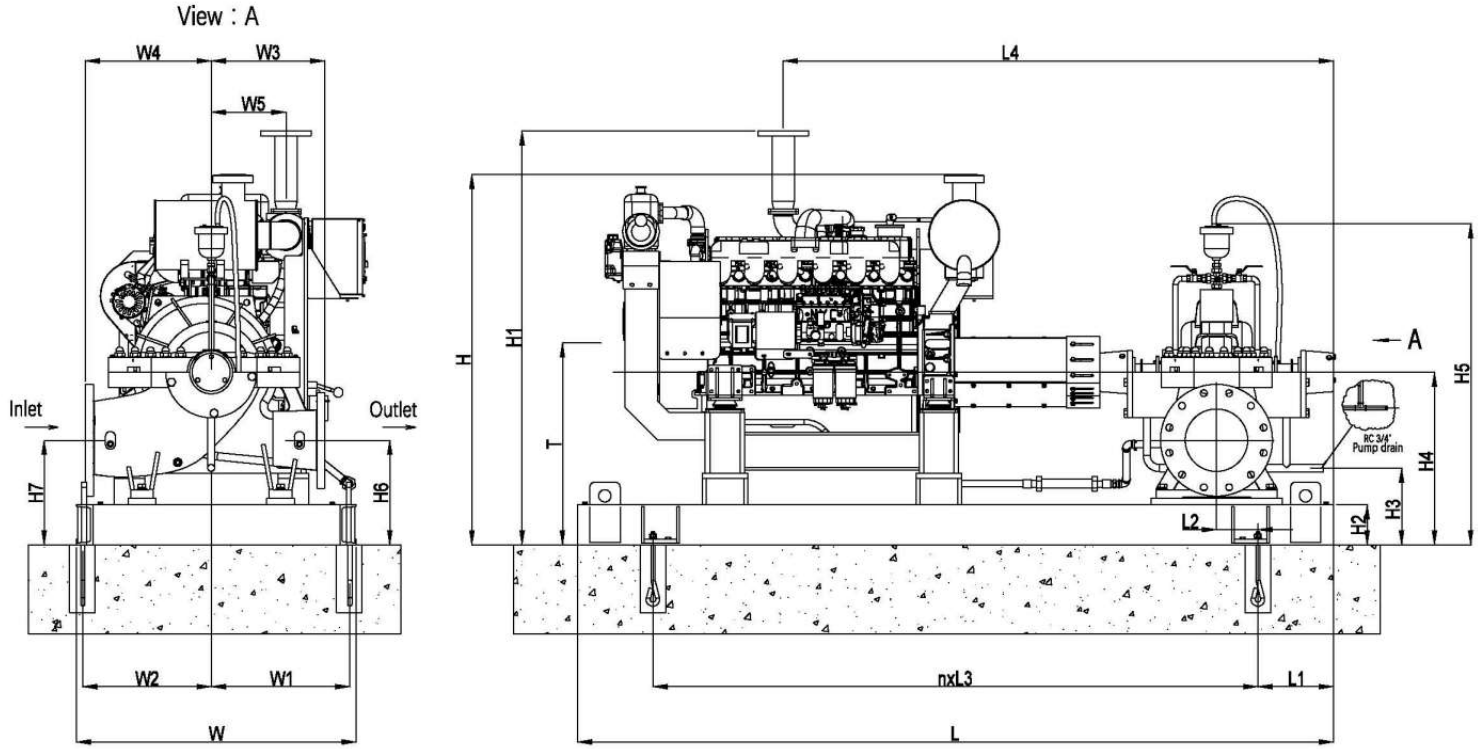

Diesel engine	Dimensions (Unit:mm)																					Anchor bolt	Anchor bolt box
	L	L1	L2	n	L3	L4	W	W1	W2	W3	W4	W5	H	H1	H2	H3	H4	H5	H6	H7	T①		
NM4-90	2200	300	100	2	800	1569	1000	575	375	250	330	297	1120	1161	120	190	465	895	305	305	604	6-M16x300	6-120x120x300
NM4-105	2200	300	65	2	800	1600	1000	565	385	250	330	294	1159	1199	120	190	465	895	305	305	573	6-M16x300	6-120x120x300
NM4-108	2200	300	65	2	800	1600	1000	565	385	250	330	294	1159	1199	120	190	465	895	305	305	573	6-M16x300	6-120x120x300
NM4-102B	2200	300	65	2	800	1577	950	500	400	250	330	253	1409	1255	120	190	465	895	305	305	706	6-M16x300	6-120x120x300
NM4-108B	2300	160	205	3	660	1681	1000	575	375	250	330	327	1212	1362	140	210	485	915	325	325	608	8-M16x300	8-120x120x300
NM6-110B	2600	250	115	3	700	1753	950	525	375	250	330	270	1402	1320	140	285	560	990	400	400	639	8-M16x300	8-120x120x300
NM4-90B	2200	300	100	2	800	1556	1000	575	375	250	330	222	1384	1164	120	190	465	895	305	305	590	6-M16x300	6-120x120x300

①: Oil pump benchmark

The force and torque of the pipe

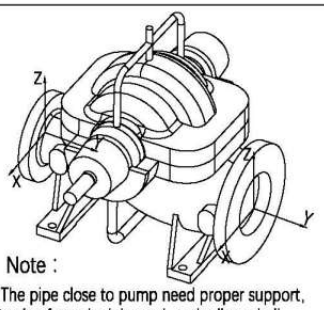

Note :

The pipe close to pump need proper support, Gravity from the inlet and outlet lines shall not be borne by the pump。

Pump Flange	Unit	Axial Direction		
		Fx	Fy	Fz
Inlet (5 INCH)	Pound	560	700	460
Outlet (3 INCH)	Pound	240	300	200
Inlet (DN 125)	Newton	2490	3110	2050
Outlet (DN 80)	Newton	1070	1330	890
Pump Flange	Unit	Axial Direction		
		Mx	My	Mz
Inlet (5 INCH)	Pound-Feet	1700	870	1300
Outlet (3 INCH)	Pound-Feet	700	350	530
Inlet (DN 125)	Newton-meter	2300	1180	1760
Outlet (DN 80)	Newton-meter	950	470	720

Flange specification

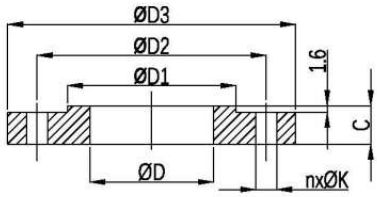

ANSI B16.1 250 Lb RF	ØD	ØD1	ØD2	ØD3	n	ØK	C
Inlet 5 INCH	128.3	211.0	234.9	279.4	8	22.3	35.0
Outlet 3 INCH	76.2	144.5	168.1	209.1	8	22.3	28.4

NOTE : ALL DIMENSIONS AND WEIGHTS ARE PRELIMINARY NOT FOR CONSTRUCTION USE. CERTIFIED AS BUILT DRAWINGS ARE AVAILABLE UPON REQUEST.

The contents of this publication must not be regarded as binding. EBARA ENGINEERING SINGAPORE PTE. LTD. reserves the right to effect any modification it deems necessary, without prior notice.

OUTLINE DIMENSIONS - SINGLE STAGE

DIESEL ENGINE DRIVEN FIRE PUMP SETS

CNPA125-80-350

UL LISTED FM APPROVED

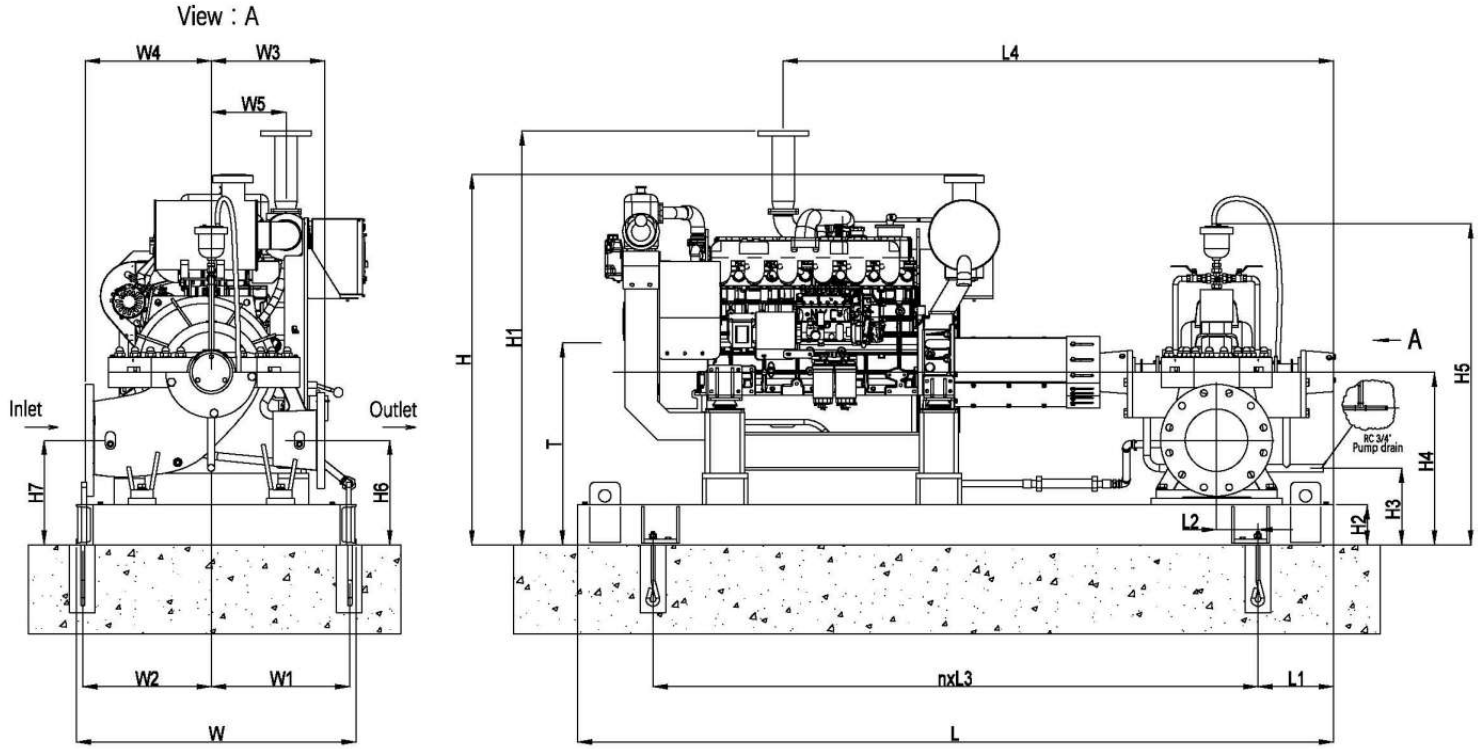

Diesel engine	Dimensions (Unit:mm)																					Anchor bolt	Anchor bolt box
	L	L1	L2	n	L3	L4	W	W1	W2	W3	W4	W5	H	H1	H2	H3	H4	H5	H6	H7	T①		
NM4-108B	2300	160	210	3	660	1690	1000	575	375	330	360	327	1195	1368	140	240	490	1015	310	310	613	8-M16x300	8-120x120x300
NM6-110B	2600	160	210	3	760	1806	950	525	375	330	360	270	1402	1320	140	310	560	1085	380	380	639	8-M16x300	8-120x120x300
NM6-110E	2750	175	195	3	800	1969	1200	695	455	330	360	318	1658	1577	140	310	560	1085	380	380	666	8-M16x300	8-120x120x300
NM6-110D	2750	175	195	3	800	1969	1200	695	455	330	360	318	1658	1577	140	310	560	1085	380	380	666	8-M16x300	8-120x120x300
NM6-108E	2750	175	195	3	800	1887	1100	575	475	330	360	331	1494	1625	140	310	560	1085	380	380	725	8-M16x300	8-120x120x300

①: Oil pump benchmark

The force and torque of the pipe

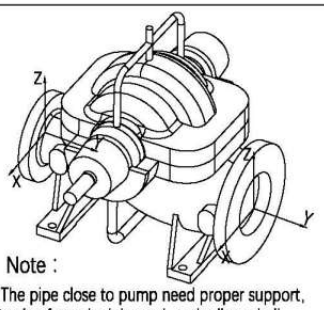

Note :

The pipe close to pump need proper support, Gravity from the inlet and outlet lines shall not be borne by the pump。

Pump Flange	Unit	Axial Direction		
		Fx	Fy	Fz
Inlet (5 INCH)	Pound	560	700	460
Outlet (3 INCH)	Pound	240	300	200
Inlet (DN 125)	Newton	2490	3110	2050
Outlet (DN 80)	Newton	1070	1330	890
Pump Flange	**Unit**	**Axial Direction**		
		Mx	My	Mz
Inlet (5 INCH)	Pound-Feet	1700	870	1300
Outlet (3 INCH)	Pound-Feet	700	350	530
Inlet (DN 125)	Newton-meter	2300	1180	1760
Outlet (DN 80)	Newton-meter	950	470	720

Flange specification

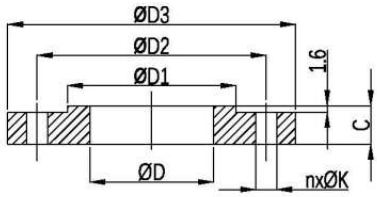

ANSI B16.1 250 Lb RF	ØD	ØD1	ØD2	ØD3	n	ØK	C
Inlet 5 INCH	128.3	211.0	234.9	279.4	8	22.3	35.0
Outlet 3 INCH	76.2	144.5	168.1	209.1	8	22.3	28.4

NOTE : ALL DIMENSIONS AND WEIGHTS ARE PRELIMINARY NOT FOR CONSTRUCTION USE. CERTIFIED AS BUILT DRAWINGS ARE AVAILABLE UPON REQUEST.

The contents of this publication must not be regarded as binding. EBARA ENGINEERING SINGAPORE PTE. LTD. reserves the right to effect any modification it deems necessary, without prior notice.

OUTLINE DIMENSIONS - SINGLE STAGE

DIESEL ENGINE DRIVEN FIRE PUMP SETS

CNPA125-100-300

UL LISTED FM APPROVED

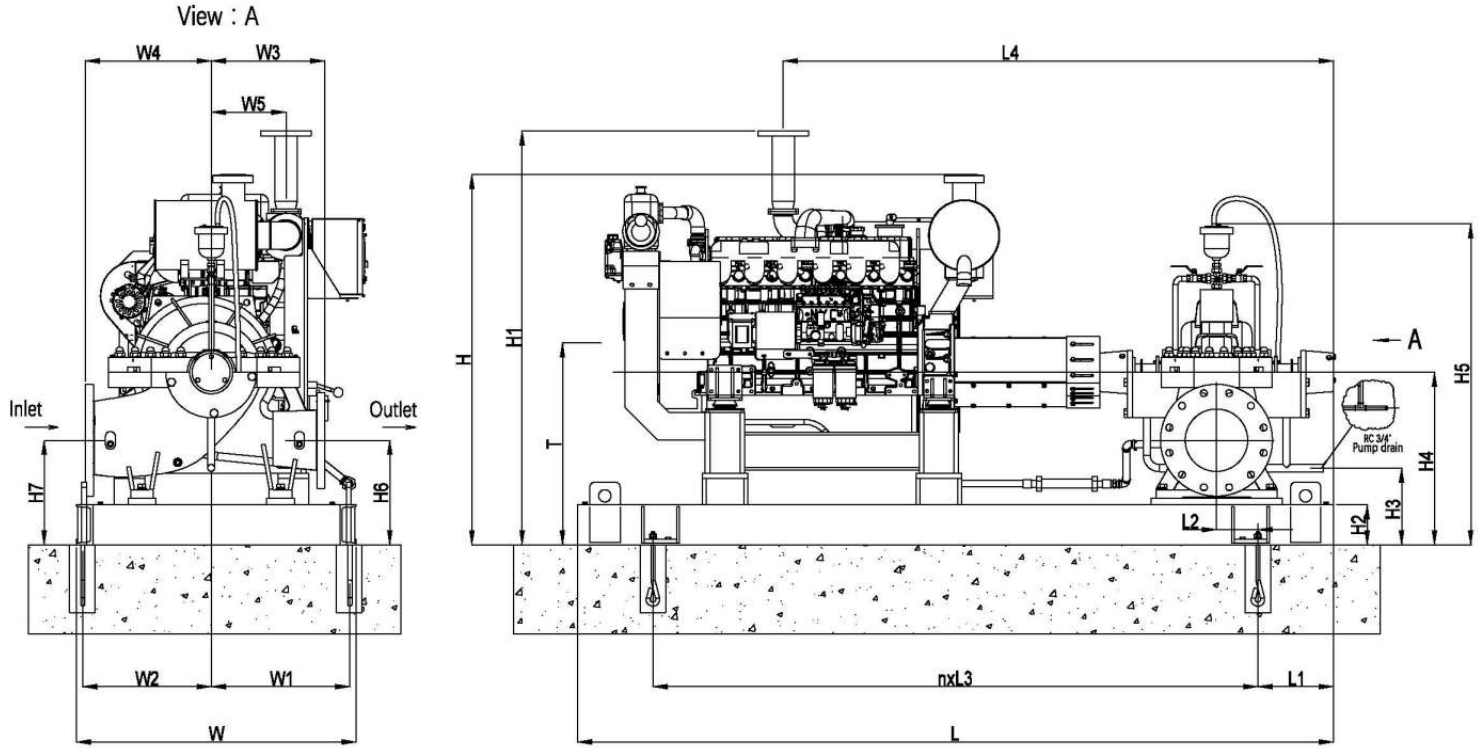

Diesel engine	Dimensions (Unit:mm)																					Anchor bolt	Anchor bolt box
	L	L1	L2	n	L3	L4	W	W1	W2	W3	W4	W5	H	H1	H2	H3	H4	H5	H6	H7	T①		
NM4-105	2200	300	50	2	800	1590	970	560	360	290	330	294	1148	1228	140	200	485	958	315	315	594	6-M16x300	6-120x120x300
NM4-108	2200	300	50	2	800	1590	970	560	360	290	330	294	1148	1228	140	200	485	958	315	315	594	6-M16x300	6-120x120x300
NM4-102B	2200	300	70	2	800	1587	950	500	400	290	330	253	1429	1275	140	200	485	958	315	315	726	6-M16x300	6-120x120x300
NM4-108B	2300	250	120	3	600	1693	1000	575	375	290	330	327	1200	1362	140	200	485	958	315	315	608	8-M16x300	8-120x120x300
NM6-110B	2600	160	210	3	760	1763	950	525	375	290	330	270	1402	1320	140	275	560	1033	390	390	639	8-M16x300	8-120x120x300
NM6-110E	2750	175	195	3	800	1974	1200	695	455	290	330	318	1658	1577	140	275	560	1033	390	390	560	8-M16x300	8-120x120x300

①: Oil pump benchmark

The force and torque of the pipe

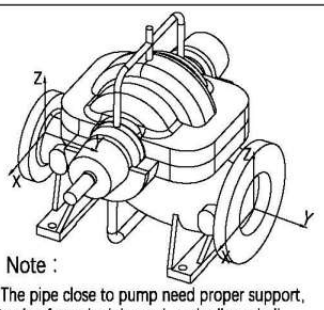

Note :

The pipe close to pump need proper support, Gravity from the inlet and outlet lines shall not be borne by the pump。

Pump Flange	Unit	Axial Direction		
		Fx	Fy	Fz
Inlet (5 INCH)	Pound	560	700	460
Outlet (4 INCH)	Pound	320	400	260
Inlet (DN 125)	Newton	2490	3110	2050
Outlet (DN 100)	Newton	1420	1780	1160
Pump Flange	**Unit**	**Axial Direction**		
		Mx	My	Mz
Inlet (5 INCH)	Pound-Feet	1700	870	1300
Outlet (4 INCH)	Pound-Feet	980	500	740
Inlet (DN 125)	Newton-meter	2300	1180	1760
Outlet (DN 100)	Newton-meter	1330	680	1000

Flange specification

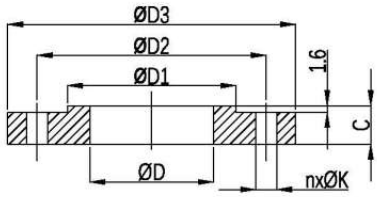

ANSI B16.1 250 Lb RF	ØD	ØD1	ØD2	ØD3	n	ØK	C
Inlet 5 INCH	128.3	211.0	234.9	279.4	8	22.3	35.0
Outlet 4 INCH	102.4	176.3	200.1	254.0	8	22.3	31.7

NOTE : ALL DIMENSIONS AND WEIGHTS ARE PRELIMINARY NOT FOR CONSTRUCTION USE. CERTIFIED AS BUILT DRAWINGS ARE AVAILABLE UPON REQUEST.

The contents of this publication must not be regarded as binding. EBARA ENGINEERING SINGAPORE PTE. LTD. reserves the right to effect any modification it deems necessary, without prior notice.

OUTLINE DIMENSIONS - SINGLE STAGE

DIESEL ENGINE DRIVEN FIRE PUMP SETS

CNPA150-125-250

UL LISTED FM APPROVED

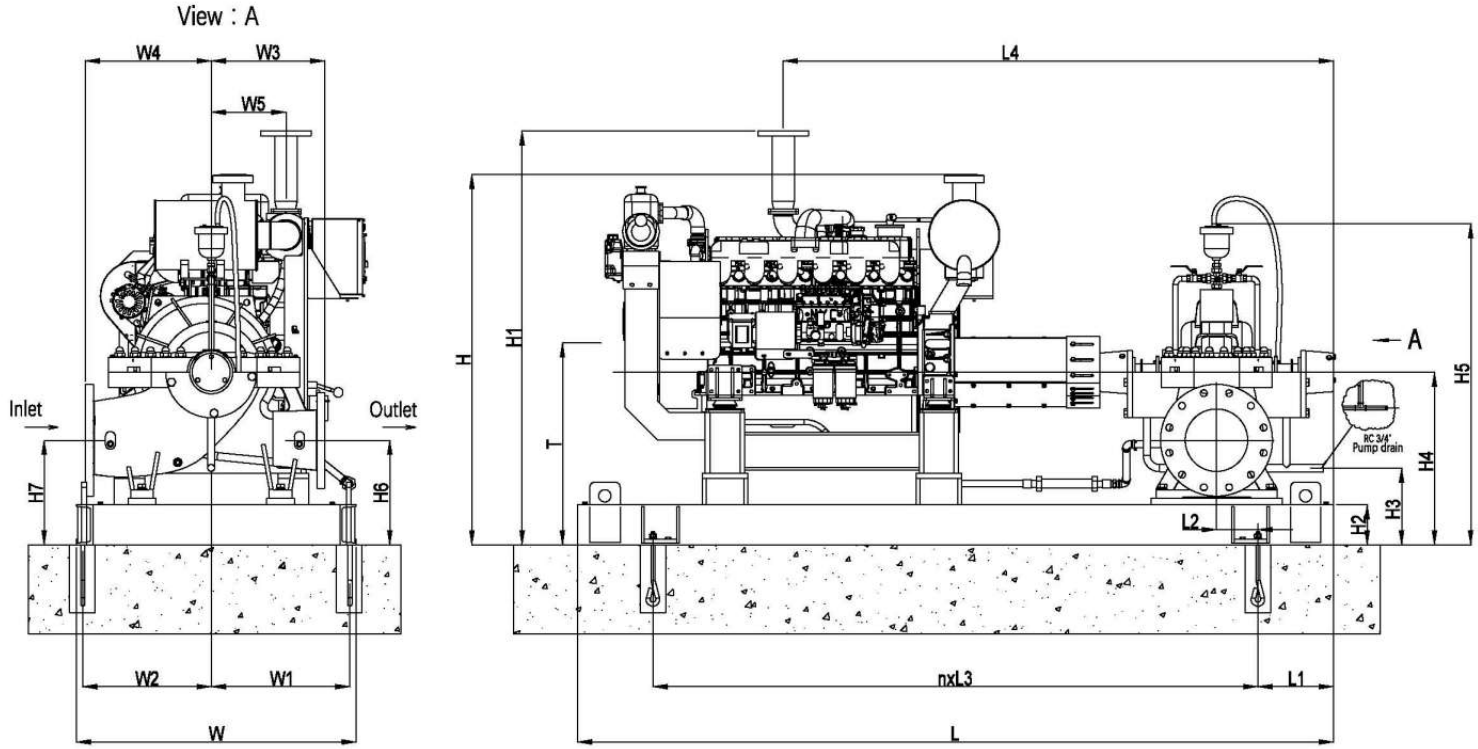

Diesel engine	Dimensions (Unit:mm)																					Anchor bolt	Anchor bolt box
	L	L1	L2	n	L3	L4	W	W1	W2	W3	W4	W5	H	H1	H2	H3	H4	H5	H6	H7	T①		
NM4-105	2250	225	145	3	600	1619	1000	575	375	300	350	294	1222	1282	120	220	540	1020	340	340	648	8-M16x300	8-120x120x300
NM4-108	2300	250	150	3	600	1659	1000	585	365	300	350	260	1283	1283	120	220	540	1020	340	340	648	8-M16x300	8-120x120x300
NM4-102B	2300	250	150	3	600	1634	1000	525	525	300	350	253	1484	1330	120	220	540	1020	340	340		8-M16x300	8-120x120x300
NM4-108B	2300	250	120	3	600	1703	1050	580	420	300	350	327	1510	1438	140	240	560	1040	360	360	683	8-M16x300	8-120x120x300
NM6-110B	2700	300	70	3	700	1825	1050	525	475	300	350	270	1417	1402	140	240	560	1040	360	360	638	8-M16x300	8-120x120x300
NM6-110D	2800	200	250	3	800	2061	1200	675	475	300	350	318	1640	1577	140	240	560	1040	360	360	666	8-M16x300	8-120x120x300

①: Oil pump benchmark

The force and torque of the pipe

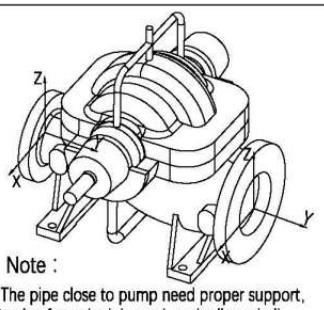

Note :

The pipe close to pump need proper support, Gravity from the inlet and outlet lines shall not be borne by the pump。

Pump Flange	Unit	Axial Direction		
		Fx	Fy	Fz
Inlet (6 INCH)	Pound	560	700	460
Outlet (5 INCH)	Pound	560	700	460
Inlet (DN 150)	Newton	2490	3110	2050
Outlet (DN 125)	Newton	2490	3110	2050
Pump Flange	**Unit**	**Axial Direction**		
		Mx	My	Mz
Inlet (6 INCH)	Pound-Feet	1700	870	1300
Outlet (5 INCH)	Pound-Feet	1700	870	1300
Inlet (DN 150)	Newton-meter	2300	1180	1760
Outlet (DN 125)	Newton-meter	2300	1180	1760

Flange specification

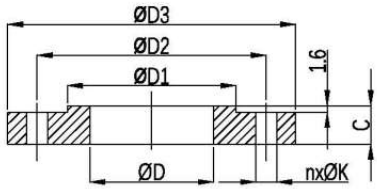

ANSI B16.1 250 Lb RF	ØD	ØD1	ØD2	ØD3	n	ØK	C
Inlet 6 INCH	154.2	246.1	269.7	317.5	12	22.3	36.5
Outlet 5 INCH	128.3	211.0	234.9	279.4	8	22.3	35.0

NOTE : ALL DIMENSIONS AND WEIGHTS ARE PRELIMINARY NOT FOR CONSTRUCTION USE. CERTIFIED AS BUILT DRAWINGS ARE AVAILABLE UPON REQUEST.

The contents of this publication must not be regarded as binding. EBARA ENGINEERING SINGAPORE PTE. LTD. reserves the right to effect any modification it deems necessary, without prior notice.

OUTLINE DIMENSIONS - SINGLE STAGE

DIESEL ENGINE DRIVEN FIRE PUMP SETS

CNPA150-125-310

UL LISTED FM APPROVED

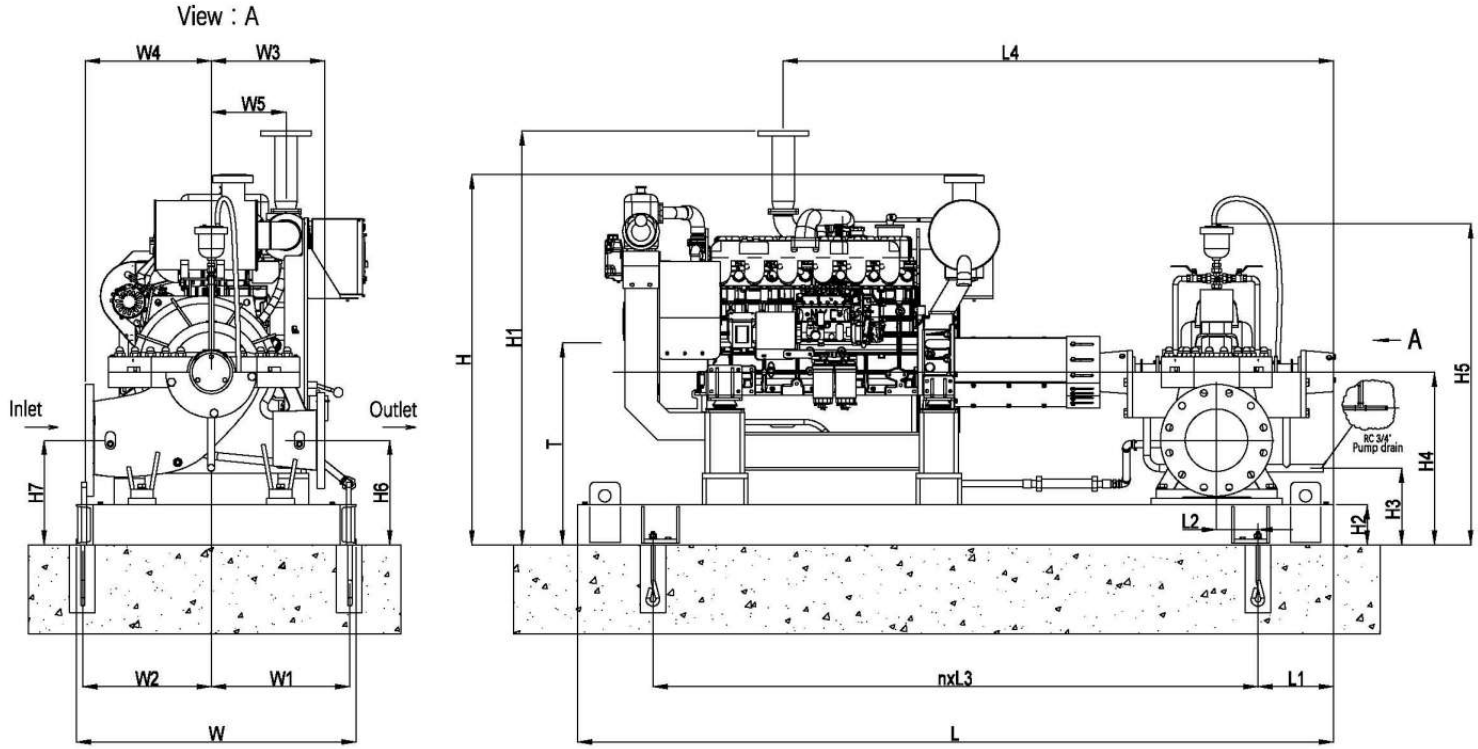

Diesel engine	Dimensions (Unit:mm)																					Anchor bolt	Anchor bolt box
	L	L1	L2	n	L3	L4	W	W1	W2	W3	W4	W5	H	H1	H2	H3	H4	H5	H6	H7	T①		
NM6-110B	2700	210	190	3	760	1805	1050	545	455	350	400	270	1402	1320	140	220	560	1055	340	340	639	8-M16x300	8-120x120x300
NM6-110D/NM6-110E	2800	200	200	3	800	2016	1200	700	450	350	400	318	1680	1577	140	220	560	1055	340	340	666	8-M16x300	8-120x120x300

①: Oil pump benchmark

The force and torque of the pipe

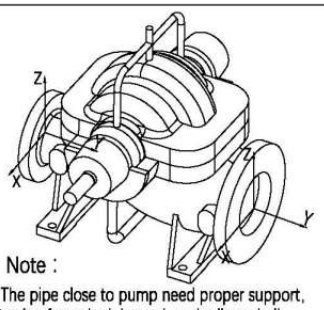

Note :

The pipe close to pump need proper support, Gravity from the inlet and outlet lines shall not be borne by the pump。

Pump Flange	Unit	Axial Direction		
		Fx	Fy	Fz
Inlet (6 INCH)	Pound	560	700	460
Outlet (5 INCH)	Pound	560	700	460
Inlet (DN 150)	Newton	2490	3110	2050
Outlet (DN 125)	Newton	2490	3110	2050
Pump Flange	**Unit**	**Axial Direction**		
		Mx	My	Mz
Inlet (6 INCH)	Pound-Feet	1700	870	1300
Outlet (5 INCH)	Pound-Feet	1700	870	1300
Inlet (DN 150)	Newton-meter	2300	1180	1760
Outlet (DN 125)	Newton-meter	2300	1180	1760

Flange specification

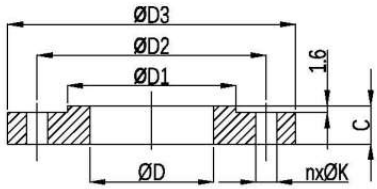

ANSI B16.1 250 Lb RF	ØD	ØD1	ØD2	ØD3	n	ØK	C
Inlet 6 INCH	154.2	246.1	269.7	317.5	12	22.3	36.5
Outlet 5 INCH	128.3	211.0	234.9	279.4	8	22.3	35.0

NOTE : ALL DIMENSIONS AND WEIGHTS ARE PRELIMINARY NOT FOR CONSTRUCTION USE. CERTIFIED AS BUILT DRAWINGS ARE AVAILABLE UPON REQUEST.

The contents of this publication must not be regarded as binding. EBARA ENGINEERING SINGAPORE PTE. LTD. reserves the right to effect any modification it deems necessary, without prior notice.

OUTLINE DIMENSIONS - SINGLE STAGE

DIESEL ENGINE DRIVEN FIRE PUMP SETS

CNPA150-125-400

UL LISTED FM APPROVED

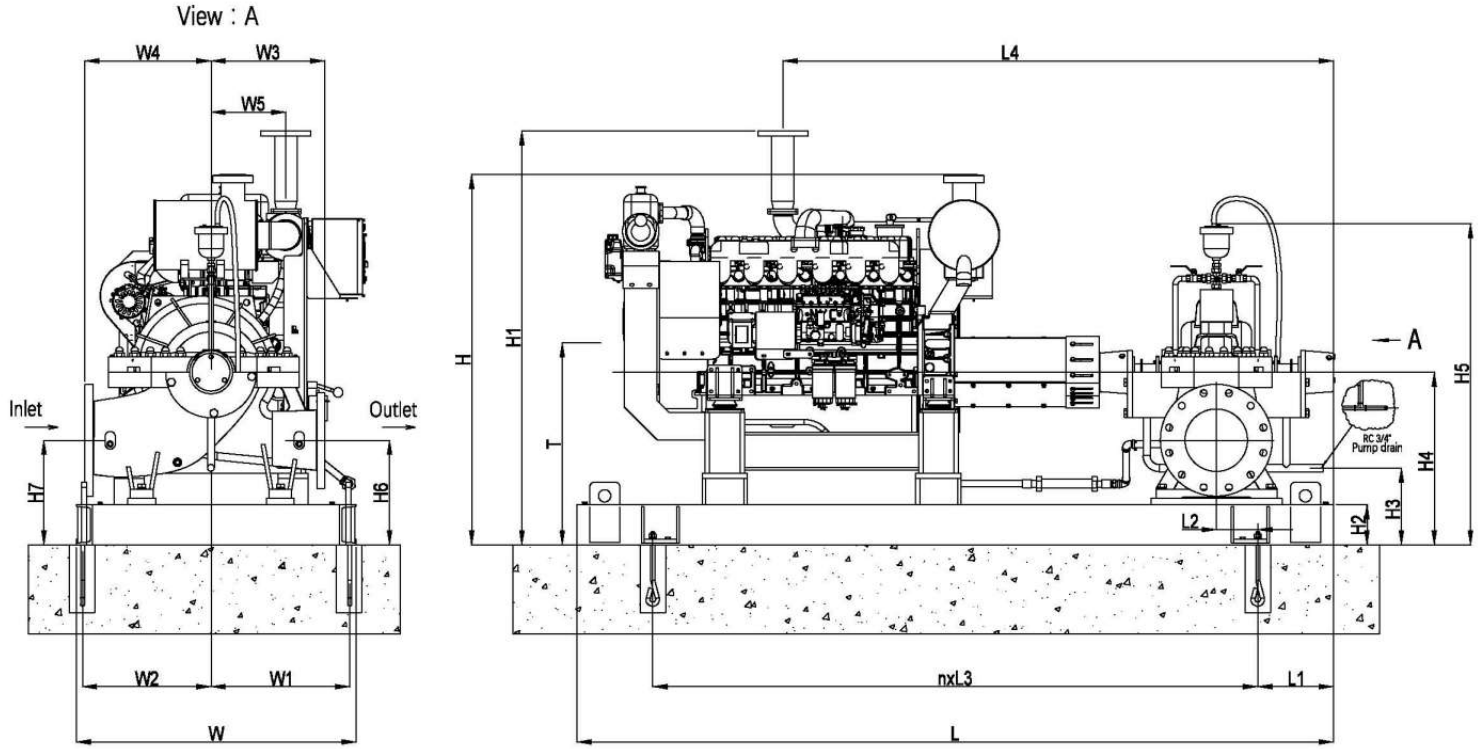

Diesel engine	Dimensions (Unit:mm)																					Anchor bolt	Anchor bolt box
	L	L1	L2	n	L3	L4	W	W1	W2	W3	W4	W5	H	H1	H2	H3	H4	H5	H6	H7	T①		
NM6-110D/NM6-110E	2900	250	160	3	800	2098	1250	685	515	350	500	318	1718	1637	140	250	620	1155	335	335	726	8-M16x300	8-120x120x300
NM6-108E	2850	225	185	3	800	2016	1100	595	455	350	500	331	1685	1685	140	250	620	1155	335	335	785	8-M16x300	8-120x120x300

①: Oil pump benchmark

The force and torque of the pipe

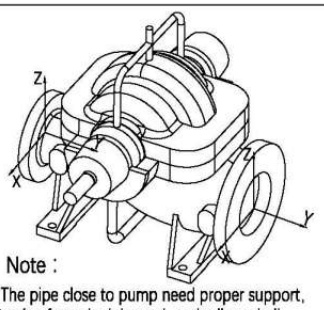

Note :

The pipe close to pump need proper support, Gravity from the inlet and outlet lines shall not be borne by the pump。

Pump Flange	Unit	Axial Direction		
		Fx	Fy	Fz
Inlet (6 INCH)	Pound	560	700	460
Outlet (5 INCH)	Pound	560	700	460
Inlet (DN 150)	Newton	2490	3110	2050
Outlet (DN 125)	Newton	2490	3110	2050
Pump Flange	**Unit**	**Axial Direction**		
		Mx	My	Mz
Inlet (6 INCH)	Pound-Feet	1700	870	1300
Outlet (5 INCH)	Pound-Feet	1700	870	1300
Inlet (DN 150)	Newton-meter	2300	1180	1760
Outlet (DN 125)	Newton-meter	2300	1180	1760

Flange specification

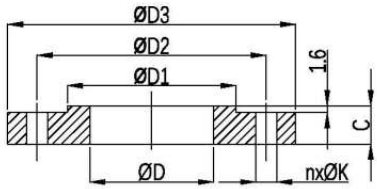

ANSI B16.1 250 Lb RF	ØD	ØD1	ØD2	ØD3	n	ØK	C
Inlet 6 INCH	154.2	246.1	269.7	317.5	12	22.3	36.5
Outlet 5 INCH	128.3	211.0	234.9	279.4	8	22.3	35.0

NOTE : ALL DIMENSIONS AND WEIGHTS ARE PRELIMINARY NOT FOR CONSTRUCTION USE. CERTIFIED AS BUILT DRAWINGS ARE AVAILABLE UPON REQUEST.

The contents of this publication must not be regarded as binding. EBARA ENGINEERING SINGAPORE PTE. LTD. reserves the right to effect any modification it deems necessary, without prior notice.

OUTLINE DIMENSIONS - SINGLE STAGE

DIESEL ENGINE DRIVEN FIRE PUMP SETS

CNPA200-150-250

UL LISTED FM APPROVED

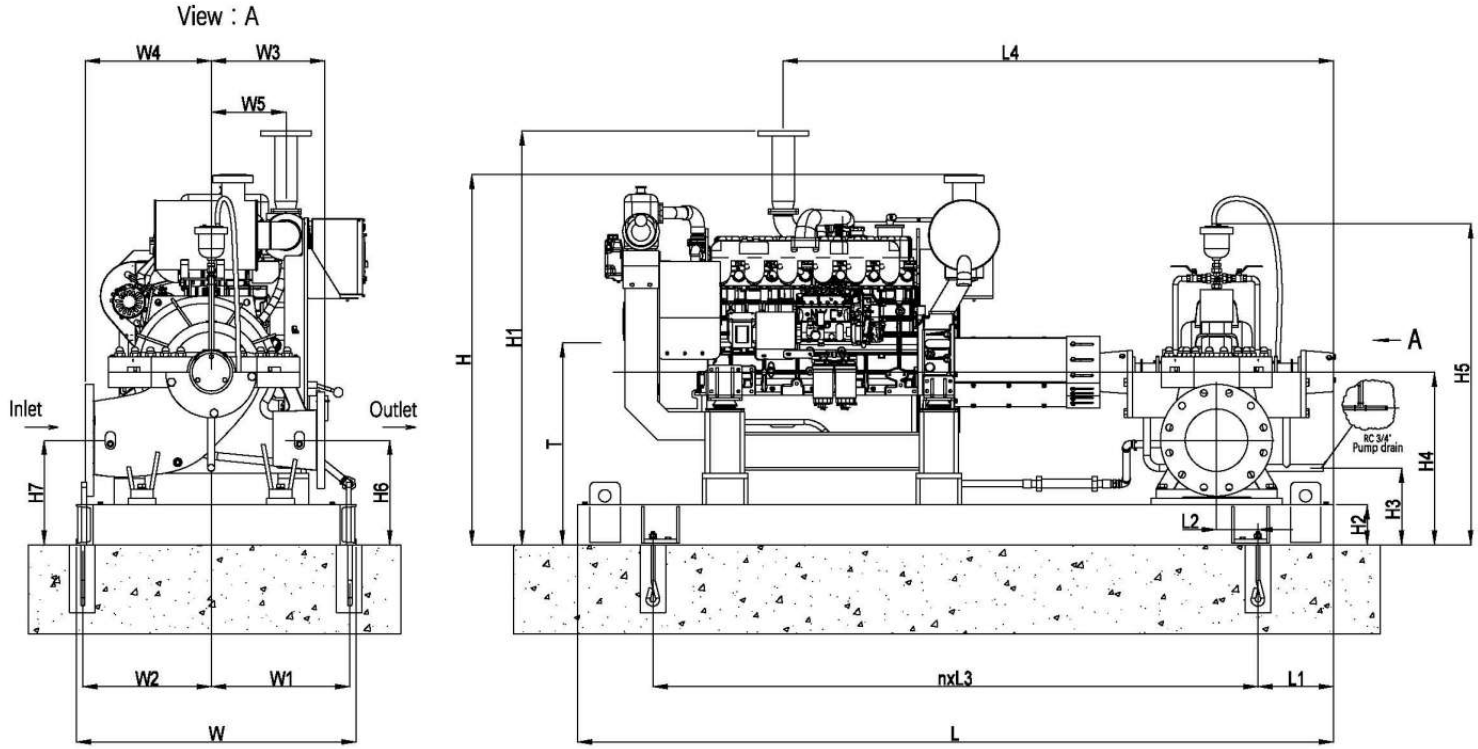

Diesel engine	Dimensions (Unit:mm)																					Anchor bolt	Anchor bolt box
	L	L1	L2	n	L3	L4	W	W1	W2	W3	W4	W5	H	H1	H2	H3	H4	H5	H6	H7	T①		
NM4-102B	2300	190	210	3	640	1674	1000	525	425	300	400	253	1503	1350	140	210	560	1043	360	360	668	8-M16x300	8-120x120x300
NM4-105	2300	190	210	3	640	1674	1100	615	435	300	400	294	1288	1302	140	210	560	1043	360	360	668	8-M16x300	8-120x120x300
NM4-108	2300	190	210	3	640	1674	1100	615	435	300	400	294	1288	1302	140	210	560	1043	360	360	668	8-M16x300	8-120x120x300
NM4-108B	2400	150	250	3	700	1733	1100	615	435	300	400	327	1275	1438	140	210	560	1043	360	360	683	8-M16x300	8-120x120x300
NM6-110B	2800	200	200	3	800	1855	1100	575	475	300	400	270	1042	1317	140	210	560	1043	360	360	871	8-M16x300	8-120x120x300
NM6-110D	2800	200	200	3	800	2001	1200	675	475	300	400	318	1658	1578	140	210	560	1043	360	360	871	8-M16x300	8-120x120x300

①: Oil pump benchmark

The force and torque of the pipe

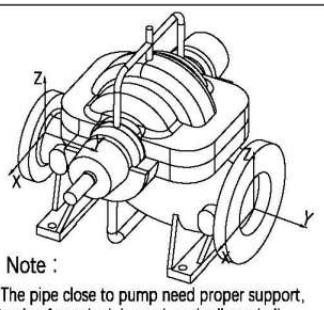

Note :

The pipe close to pump need proper support, Gravity from the inlet and outlet lines shall not be borne by the pump。

Pump Flange	Unit	Axial Direction		
		Fx	Fy	Fz
Inlet (8 INCH)	Pound	850	1100	700
Outlet (6 INCH)	Pound	560	700	460
Inlet (DN 200)	Newton	3780	4890	3110
Outlet (DN 150)	Newton	2490	3110	2050

Pump Flange	Unit	Axial Direction		
		Mx	My	Mz
Inlet (8 INCH)	Pound-Feet	2600	1300	1900
Outlet (6 INCH)	Pound-Feet	1700	870	1300
Inlet (DN 200)	Newton-meter	3530	1760	2580
Outlet (DN 150)	Newton-meter	2300	1180	1760

Flange specification

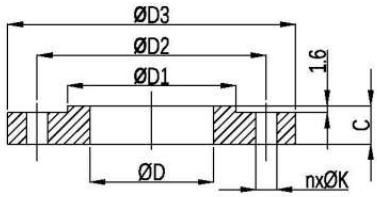

ANSI B16.1 250 Lb RF	ØD	ØD1	ØD2	ØD3	n	ØK	C
Inlet 8 INCH	203.2	303.2	330.2	381.0	12	25.4	41.1
Outlet 6 INCH	154.2	246.1	269.7	317.5	12	22.3	36.5

NOTE : ALL DIMENSIONS AND WEIGHTS ARE PRELIMINARY NOT FOR CONSTRUCTION USE. CERTIFIED AS BUILT DRAWINGS ARE AVAILABLE UPON REQUEST.

The contents of this publication must not be regarded as binding. EBARA ENGINEERING SINGAPORE PTE. LTD. reserves the right to effect any modification it deems necessary, without prior notice.

OUTLINE DIMENSIONS - SINGLE STAGE

DIESEL ENGINE DRIVEN FIRE PUMP SETS

CNPA200-150-310

UL LISTED FM APPROVED

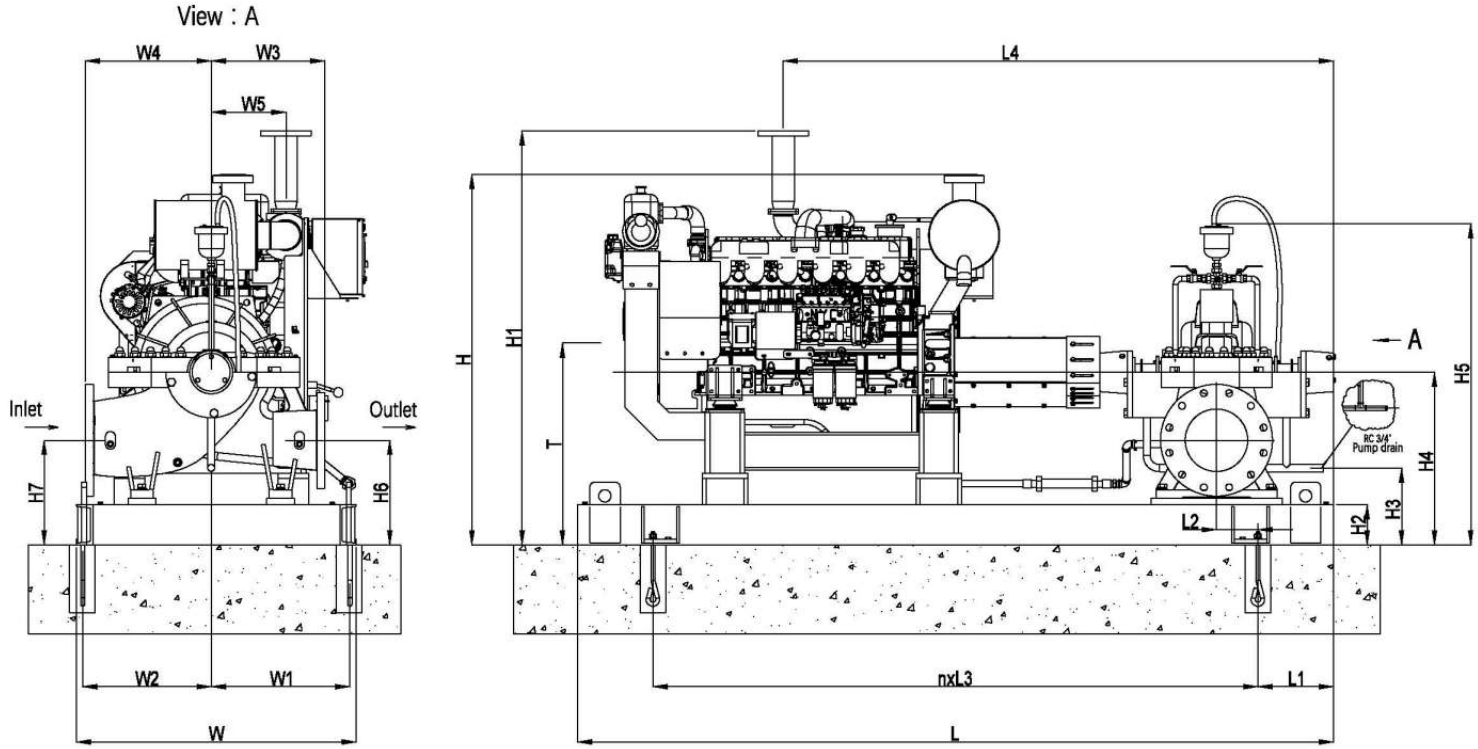

Diesel engine	Dimensions (Unit:mm)																					Anchor bolt	Anchor bolt box
	L	L1	L2	n	L3	L4	W	W1	W2	W3	W4	W5	H	H1	H2	H3	H4	H5	H6	H7	T①		
NM6-110B	2800	200	220	3	800	1936	1050	535	465	350	425	270	1408	1325	140	215	565	1070	355	370	644	8-M16x300	8-120x120x300
NM6-110D	2900	250	170	3	800	2093	1200	685	465	350	425	318	1663	1582	140	215	565	1070	355	370	671	8-M16x300	8-120x120x300
NM6-108E	2900	250	170	3	800	2031	1100	595	455	350	425	331	1629	1499	140	215	565	1070	355	370	730	8-M16x300	8-120x120x300

①: Oil pump benchmark

The force and torque of the pipe

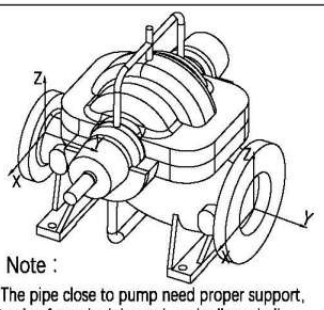

Note :

The pipe close to pump need proper support, Gravity from the inlet and outlet lines shall not be borne by the pump。

Pump Flange	Unit	Axial Direction		
		Fx	Fy	Fz
Inlet (8 INCH)	Pound	850	1100	700
Outlet (6 INCH)	Pound	560	700	460
Inlet (DN 200)	Newton	3780	4890	3110
Outlet (DN 150)	Newton	2490	3110	2050
Pump Flange	**Unit**	**Axial Direction**		
		Mx	My	Mz
Inlet (8 INCH)	Pound-Feet	2600	1300	1900
Outlet (6 INCH)	Pound-Feet	1700	870	1300
Inlet (DN 200)	Newton-meter	3530	1760	2580
Outlet (DN 150)	Newton-meter	2300	1180	1760

Flange specification

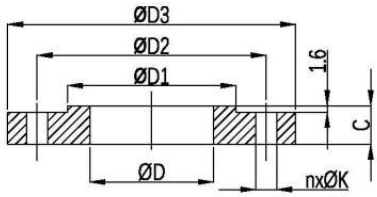

ANSI B16.1 250 Lb RF	ØD	ØD1	ØD2	ØD3	n	ØK	C
Inlet 8 INCH	203.2	303.2	330.2	381.0	12	25.4	41.1
Outlet 6 INCH	154.2	246.1	269.7	317.5	12	22.3	36.5

NOTE : ALL DIMENSIONS AND WEIGHTS ARE PRELIMINARY NOT FOR CONSTRUCTION USE. CERTIFIED AS BUILT DRAWINGS ARE AVAILABLE UPON REQUEST.

The contents of this publication must not be regarded as binding. EBARA ENGINEERING SINGAPORE PTE. LTD. reserves the right to effect any modification it deems necessary, without prior notice.

OUTLINE DIMENSIONS - SINGLE STAGE

DIESEL ENGINE DRIVEN FIRE PUMP SETS

CNPA200-150-330

UL LISTED FM APPROVED

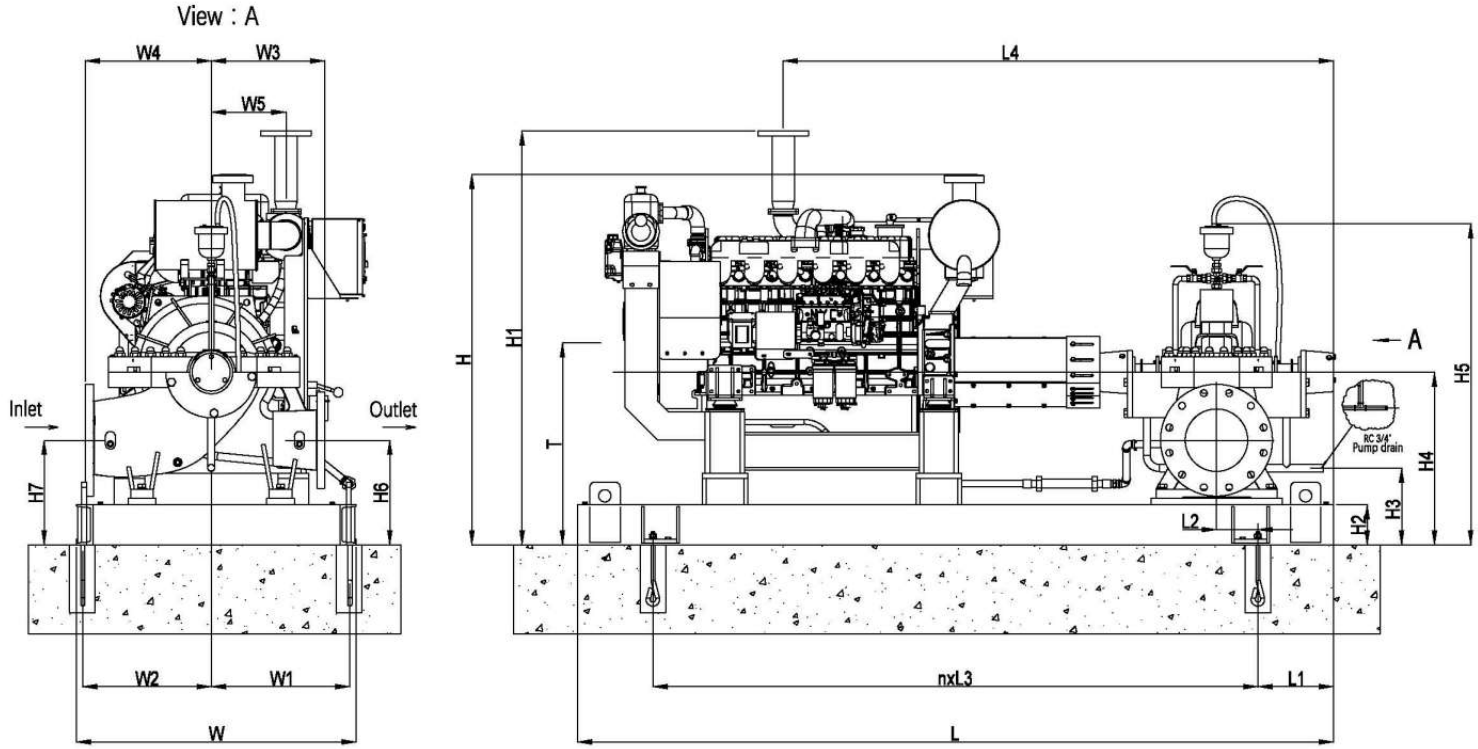

Diesel engine	Dimensions (Unit:mm)																					Anchor bolt	Anchor bolt box
	L	L1	L2	n	L3	L4	W	W1	W2	W3	W4	W5	H	H1	H2	H3	H4	H5	H6	H7	T①		
NM6-110D/NM6-110E	2900	250	170	3	800	2133	1200	675	475	350	415	318	1718	1637	140	225	620	1145	390	390	730	8-M16x300	8-120x120x300
NM6-108E	2900	250	170	3	800	2031	1100	595	455	350	415	331	1685	1554	140	225	620	1145	390	390	785	8-M16x300	8-120x120x300
NM6-105B	2700	150	300	3	800	2132	1150	625	475	350	415	200	1678	1612	140	225	620	1145	390	390	854	8-M16x300	8-120x120x300

①: Oil pump benchmark

The force and torque of the pipe

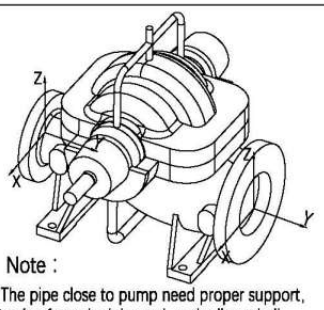

Note :

The pipe close to pump need proper support, Gravity from the inlet and outlet lines shall not be borne by the pump。

Pump Flange	Unit	Axial Direction		
		Fx	Fy	Fz
Inlet (8 INCH)	Pound	850	1100	700
Outlet (6 INCH)	Pound	560	700	460
Inlet (DN 200)	Newton	3780	4890	3110
Outlet (DN 150)	Newton	2490	3110	2050

Pump Flange	Unit	Axial Direction		
		Mx	My	Mz
Inlet (8 INCH)	Pound-Feet	2600	1300	1900
Outlet (6 INCH)	Pound-Feet	1700	870	1300
Inlet (DN 200)	Newton-meter	3530	1760	2580
Outlet (DN 150)	Newton-meter	2300	1180	1760

Flange specification

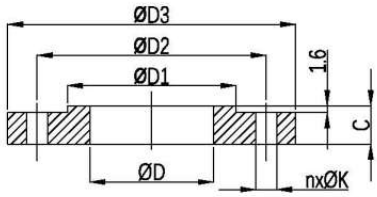

ANSI B16.1 250 Lb RF	ØD	ØD1	ØD2	ØD3	n	ØK	C
Inlet 8 INCH	203.2	303.2	330.2	381.0	12	25.4	41.1
Outlet 6 INCH	154.2	246.1	269.7	317.5	12	22.3	36.5

NOTE : ALL DIMENSIONS AND WEIGHTS ARE PRELIMINARY NOT FOR CONSTRUCTION USE. CERTIFIED AS BUILT DRAWINGS ARE AVAILABLE UPON REQUEST.

The contents of this publication must not be regarded as binding. EBARA ENGINEERING SINGAPORE PTE. LTD. reserves the right to effect any modification it deems necessary, without prior notice.

OUTLINE DIMENSIONS - SINGLE STAGE

DIESEL ENGINE DRIVEN FIRE PUMP SETS

CNPA200-150-375

UL LISTED FM APPROVED

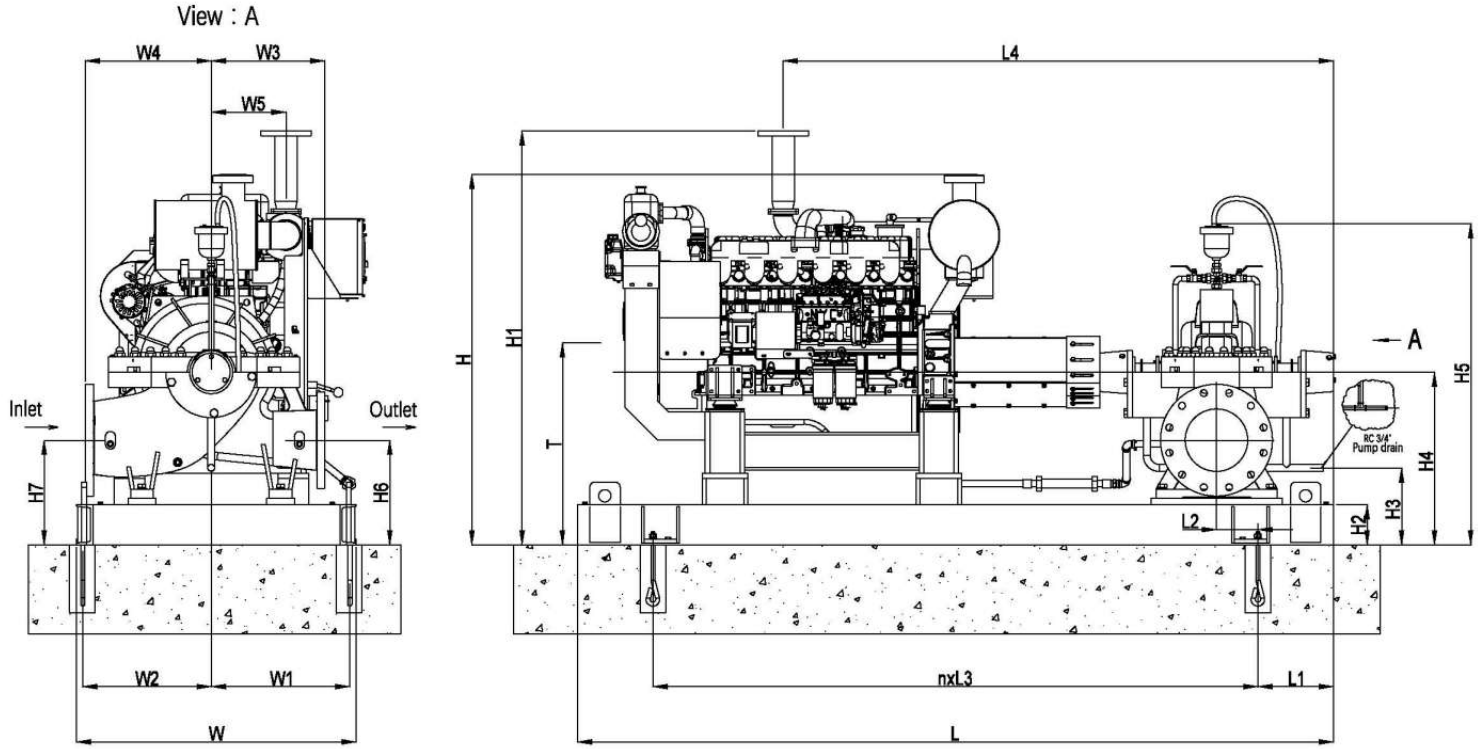

Diesel engine	Dimensions (Unit:mm)																					Anchor bolt	Anchor bolt box
	L	L1	L2	n	L3	L4	W	W1	W2	W3	W4	W5	H	H1	H2	H3	H4	H5	H6	H7	T①		
NM6-105B	2900	250	170	3	800	2031	1100	595	455	340	420	331	1685	1554	140	225	620	1145	370	370	785	8-M16x300	8-120x120x300
NM6-114C	2800	200	220	3	800	2075	1200	695	455	340	420	261	1789	1622	140	225	620	1145	370	370	931	8-M16x300	8-120x120x300
NM6-114B	2800	200	220	3	800	1951	1200	695	455	340	420	299	1816	1632	140	225	620	1145	370	370	931	8-M16x300	8-120x120x300

①: Oil pump benchmark

The force and torque of the pipe

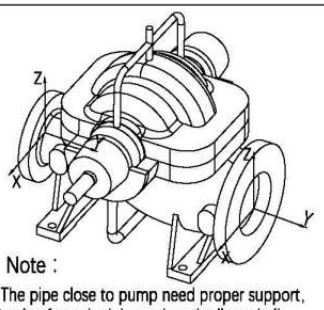

Note :

The pipe close to pump need proper support, Gravity from the inlet and outlet lines shall not be borne by the pump。

Pump Flange	Unit	Axial Direction		
		Fx	Fy	Fz
Inlet (8 INCH)	Pound	850	1100	700
Outlet (6 INCH)	Pound	560	700	460
Inlet (DN 200)	Newton	3780	4890	3110
Outlet (DN 150)	Newton	2490	3110	2050
Pump Flange	**Unit**	**Axial Direction**		
		Mx	My	Mz
Inlet (8 INCH)	Pound-Feet	2600	1300	1900
Outlet (6 INCH)	Pound-Feet	1700	870	1300
Inlet (DN 200)	Newton-meter	3530	1760	2580
Outlet (DN 150)	Newton-meter	2300	1180	1760

Flange specification

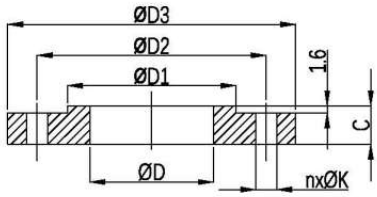

ANSI B16.1 250 Lb RF	ØD	ØD1	ØD2	ØD3	n	ØK	C
Inlet 8 INCH	203.2	303.2	330.2	381.0	12	25.4	41.1
Outlet 6 INCH	154.2	246.1	269.7	317.5	12	22.3	36.5

NOTE : ALL DIMENSIONS AND WEIGHTS ARE PRELIMINARY NOT FOR CONSTRUCTION USE. CERTIFIED AS BUILT DRAWINGS ARE AVAILABLE UPON REQUEST.

The contents of this publication must not be regarded as binding. EBARA ENGINEERING SINGAPORE PTE. LTD. reserves the right to effect any modification it deems necessary, without prior notice.

OUTLINE DIMENSIONS - SINGLE STAGE

DIESEL ENGINE DRIVEN FIRE PUMP SETS

CNPA200-150-400

UL LISTED FM APPROVED

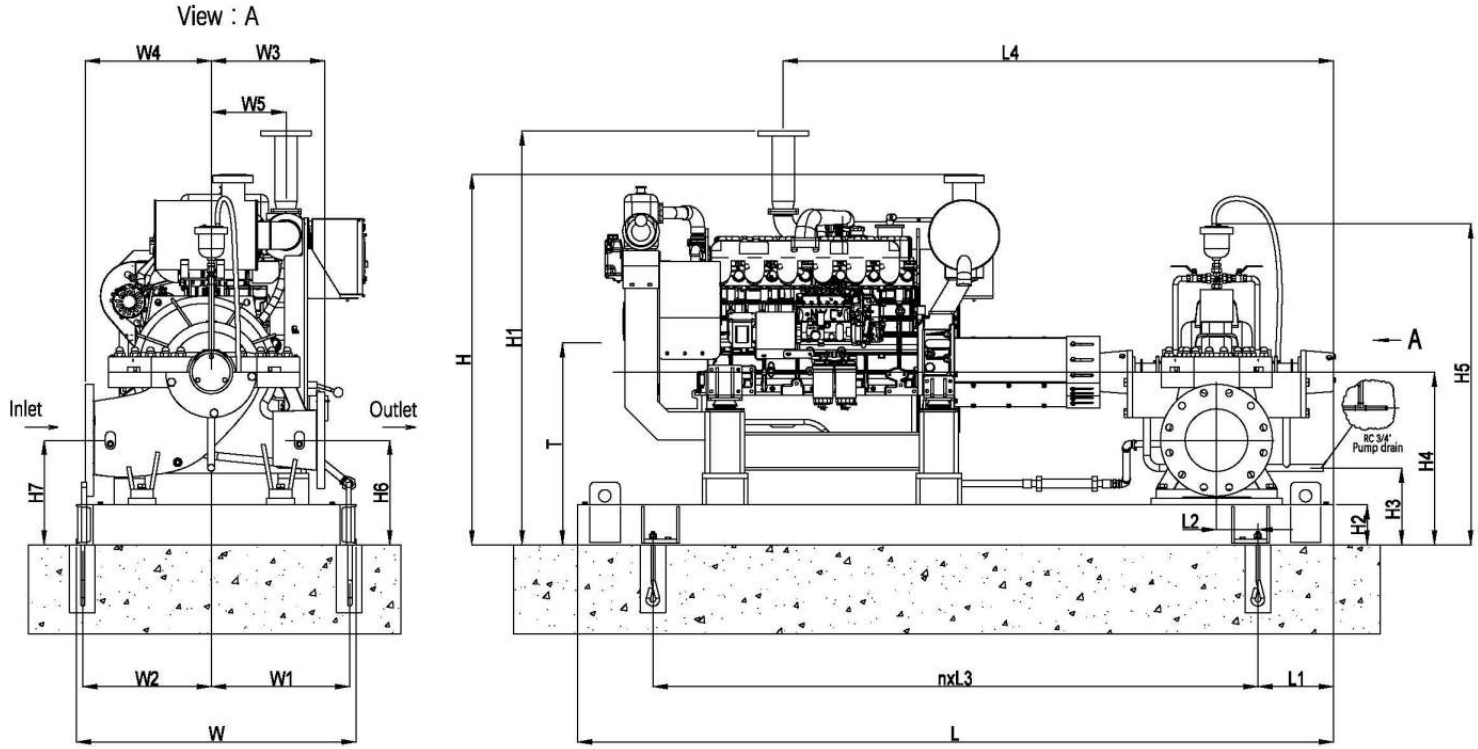

Diesel engine	Dimensions (Unit:mm)																					Anchor bolt	Anchor bolt box
	L	L1	L2	n	L3	L4	W	W1	W2	W3	W4	W5	H	H1	H2	H3	H4	H5	H6	H7	T①		
NM6-114C	2700	225	175	3	750	2037	1200	675	475	370	450	261	1970	1612	140	225	620	1150	370	370	735	8-M16x300	8-120x120x300
NM6-114	2700	225	175	3	750	2020	1200	625	525	370	450	261	1650	1757	140	225	620	1150	370	370	930	8-M16x300	8-120x120x300
NM6-114B	2700	225	175	3	750	1914	1200	675	475	370	450	300	1816	1632	140	225	620	1150	370	370	935	8-M16x300	8-120x120x300
NM6-128B	3000	300	100	3	800	2298	1250	725	475	370	450	345	1629	1565	160	245	640	1170	390	390	900	8-M20x400	8-120x120x400
NM6-128	3000	300	100	3	800	2298	1200	575	575	370	450	340	1724	1598	140	225	620	1150	370	370	895	8-M16x300	8-120x120x300
NM8-128	2800	275	125	3	750	1234	1500	725	715	370	450	591	1893	1513	160	350	745	1265	495	495	1083	8-M20x400	8-120x120x400
NM6-105B	2700	150	270	3	800	2095	1250	575	525	370	450	200	1678	1612	140	225	620	1150	370	370	880	8-M16x300	8-120x120x300

①: Oil pump benchmark

The force and torque of the pipe

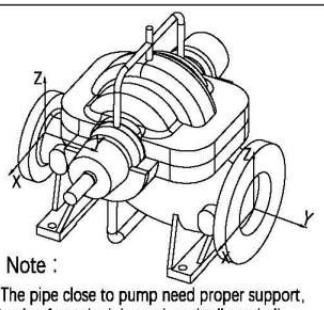

Note :

The pipe close to pump need proper support, Gravity from the inlet and outlet lines shall not be borne by the pump。

Pump Flange	Unit	Axial Direction		
		Fx	Fy	Fz
Inlet (8 INCH)	Pound	850	1100	700
Outlet (6 INCH)	Pound	560	700	460
Inlet (DN 200)	Newton	3780	4890	3110
Outlet (DN 150)	Newton	2490	3110	2050
Pump Flange	**Unit**	**Axial Direction**		
		Mx	My	Mz
Inlet (8 INCH)	Pound-Feet	2600	1300	1900
Outlet (6 INCH)	Pound-Feet	1700	870	1300
Inlet (DN 200)	Newton-meter	3530	1760	2580
Outlet (DN 150)	Newton-meter	2300	1180	1760

Flange specification

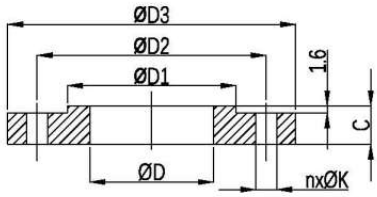

ANSI B16.1 250 Lb RF	ØD	ØD1	ØD2	ØD3	n	ØK	C
Inlet 8 INCH	203.2	303.2	330.2	381.0	12	25.4	41.1
Outlet 6 INCH	154.2	246.1	269.7	317.5	12	22.3	36.5

NOTE : ALL DIMENSIONS AND WEIGHTS ARE PRELIMINARY NOT FOR CONSTRUCTION USE. CERTIFIED AS BUILT DRAWINGS ARE AVAILABLE UPON REQUEST.

The contents of this publication must not be regarded as binding. EBARA ENGINEERING SINGAPORE PTE. LTD. reserves the right to effect any modification it deems necessary, without prior notice.

OUTLINE DIMENSIONS - SINGLE STAGE

DIESEL ENGINE DRIVEN FIRE PUMP SETS

CNPA200-150-420

UL LISTED FM APPROVED

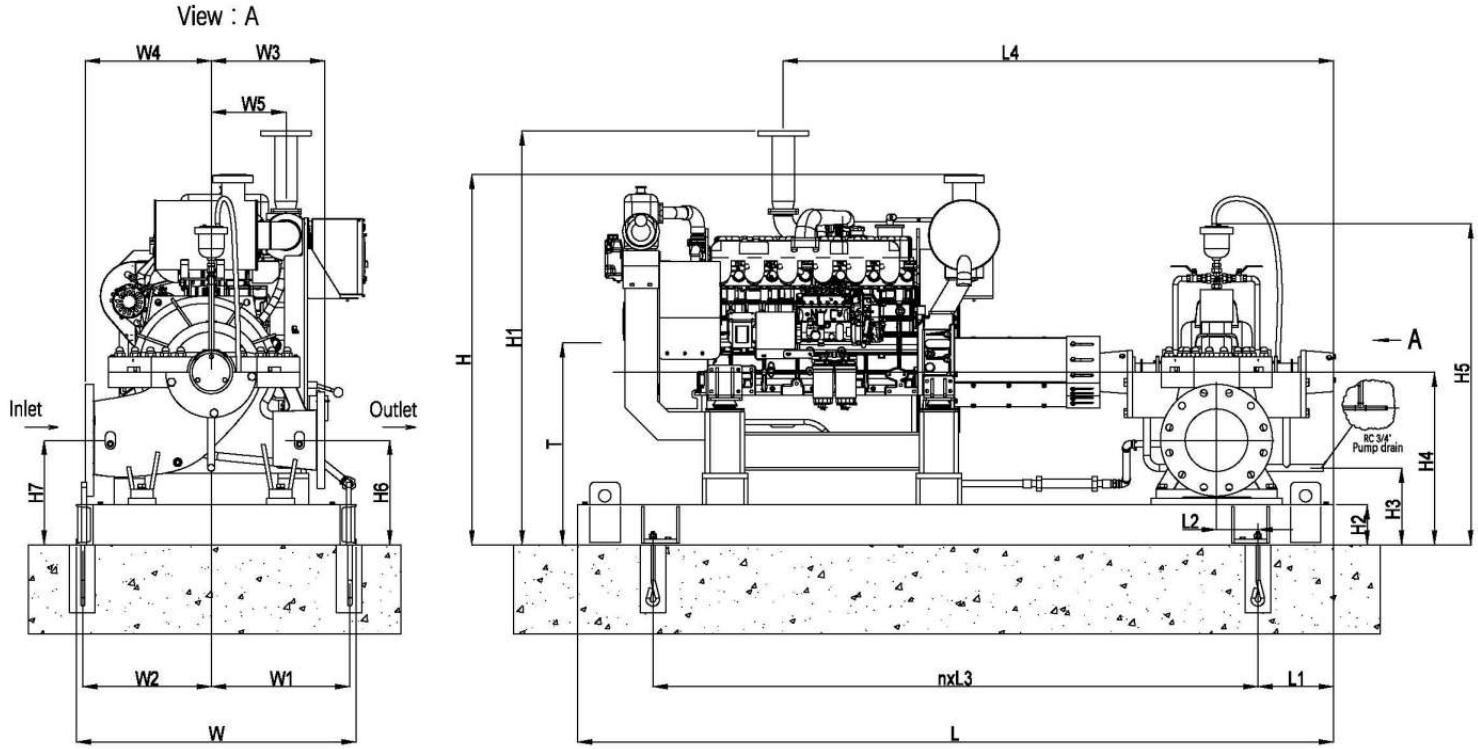

Diesel engine	Dimensions (Unit:mm)																					Anchor bolt	Anchor bolt box
	L	L1	L2	n	L3	L4	W	W1	W2	W3	W4	W5	H	H1	H2	H3	H4	H5	H6	H7	T①		
NM6-108E	2900	250	200	3	800	2051	1100	575	475	400	450	331	1554	1685	140	195	620	1170	340	370	785	8-M16x300	8-120x120x300
NM6-110D	2900	250	200	3	800	2133	1200	675	475	400	450	318	1700	1637	140	195	620	1170	340	370	725	8-M16x300	8-120x120x300

①: Oil pump benchmark

The force and torque of the pipe

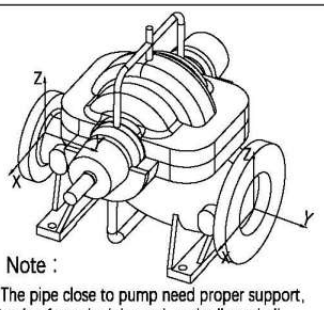

Note :

The pipe close to pump need proper support, Gravity from the inlet and outlet lines shall not be borne by the pump。

Pump Flange	Unit	Axial Direction		
		Fx	Fy	Fz
Inlet (8 INCH)	Pound	850	1100	700
Outlet (6 INCH)	Pound	560	700	460
Inlet (DN 200)	Newton	3780	4890	3110
Outlet (DN 150)	Newton	2490	3110	2050
Pump Flange	**Unit**	**Axial Direction**		
		Mx	My	Mz
Inlet (8 INCH)	Pound-Feet	2600	1300	1900
Outlet (6 INCH)	Pound-Feet	1700	870	1300
Inlet (DN 200)	Newton-meter	3530	1760	2580
Outlet (DN 150)	Newton-meter	2300	1180	1760

Flange specification

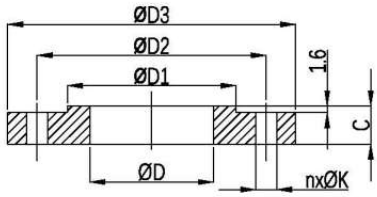

ANSI B16.1 250 Lb RF	ØD	ØD1	ØD2	ØD3	n	ØK	C
Inlet 8 INCH	203.2	303.2	330.2	381.0	12	25.4	41.1
Outlet 6 INCH	154.2	246.1	269.7	317.5	12	22.3	36.5

NOTE : ALL DIMENSIONS AND WEIGHTS ARE PRELIMINARY NOT FOR CONSTRUCTION USE. CERTIFIED AS BUILT DRAWINGS ARE AVAILABLE UPON REQUEST.

The contents of this publication must not be regarded as binding. EBARA ENGINEERING SINGAPORE PTE. LTD. reserves the right to effect any modification it deems necessary, without prior notice.

OUTLINE DIMENSIONS - SINGLE STAGE

DIESEL ENGINE DRIVEN FIRE PUMP SETS

CNPA200-150-480

UL LISTED FM APPROVED

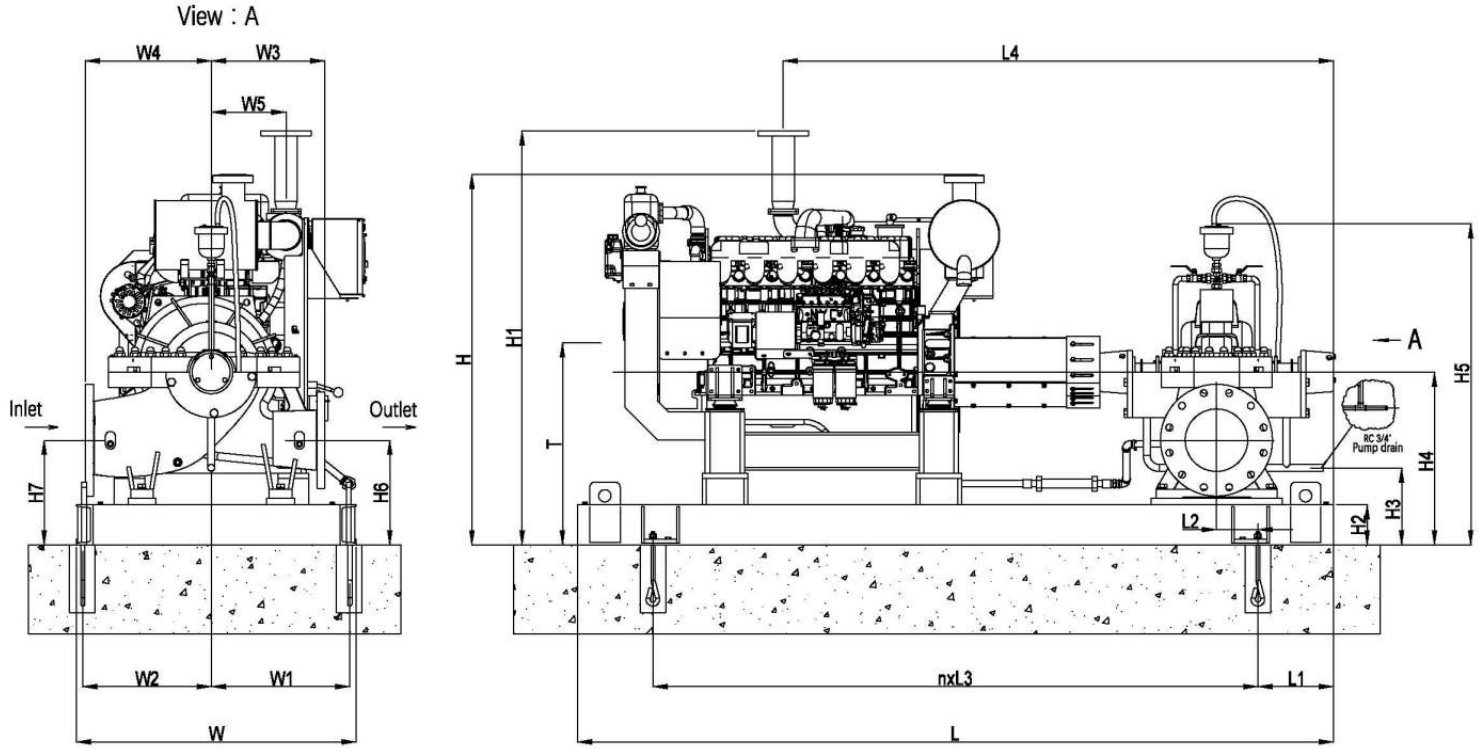

Diesel engine	Dimensions (Unit:mm)																					Anchor bolt	Anchor bolt box
	L	L1	L2	n	L3	L4	W	W1	W2	W3	W4	W5	H	H1	H2	H3	H4	H5	H6	H7	T①		
NM6-114C	2900	250	220	3	800	2175	1250	700	500	420	500	261	1979	1612	140	225	635	1225	385	385	946	8-M16x300	8-120x120x300
NM6-114B	2900	250	220	3	800	2051	1250	675	525	420	500	299	1851	1667	140	225	635	1225	385	385	946	8-M16x300	8-120x120x300
NM6-135B	3200	300	170	4	650	2371	1300	700	550	420	500	371	1730	1747	160	245	655	1245	405	405	845	10-M20x400	10-120x120x400
NM6-135	3200	300	170	4	650	2371	1300	700	550	420	500	371	1730	1747	160	245	655	1245	405	405	845	10-M20x400	10-120x120x400
NM6-128	3100	275	195	3	850	2438	1300	625	625	420	500	340	1744	1618	140	225	635	1225	385	385	845	8-M16x300	8-120x120x300
NM6-105B	2800	200	270	3	800	2200	1200	625	525	420	500	200	1693	1621	140	225	635	1225	385	385	870	8-M16x300	8-120x120x300

①: Oil pump benchmark

The force and torque of the pipe

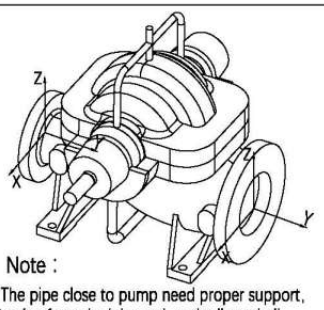

Note :

The pipe close to pump need proper support, Gravity from the inlet and outlet lines shall not be borne by the pump。

Pump Flange	Unit	Axial Direction		
		Fx	Fy	Fz
Inlet (8 INCH)	Pound	850	1100	700
Outlet (6 INCH)	Pound	560	700	460
Inlet (DN 200)	Newton	3780	4890	3110
Outlet (DN 150)	Newton	2490	3110	2050
Pump Flange	**Unit**	**Axial Direction**		
		Mx	My	Mz
Inlet (8 INCH)	Pound-Feet	2600	1300	1900
Outlet (6 INCH)	Pound-Feet	1700	870	1300
Inlet (DN 200)	Newton-meter	3530	1760	2580
Outlet (DN 150)	Newton-meter	2300	1180	1760

Flange specification

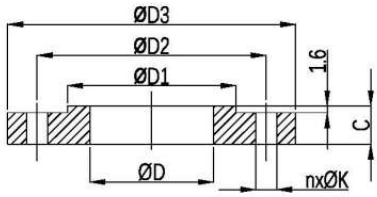

ANSI B16.1 250 Lb RF	ØD	ØD1	ØD2	ØD3	n	ØK	C
Inlet 8 INCH	203.2	303.2	330.2	381.0	12	25.4	41.1
Outlet 6 INCH	154.2	246.1	269.7	317.5	12	22.3	36.5

NOTE : ALL DIMENSIONS AND WEIGHTS ARE PRELIMINARY NOT FOR CONSTRUCTION USE. CERTIFIED AS BUILT DRAWINGS ARE AVAILABLE UPON REQUEST.

The contents of this publication must not be regarded as binding. EBARA ENGINEERING SINGAPORE PTE. LTD. reserves the right to effect any modification it deems necessary, without prior notice.

OUTLINE DIMENSIONS - SINGLE STAGE

DIESEL ENGINE DRIVEN FIRE PUMP SETS

CNPA200-150-480GL

UL LISTED FM APPROVED

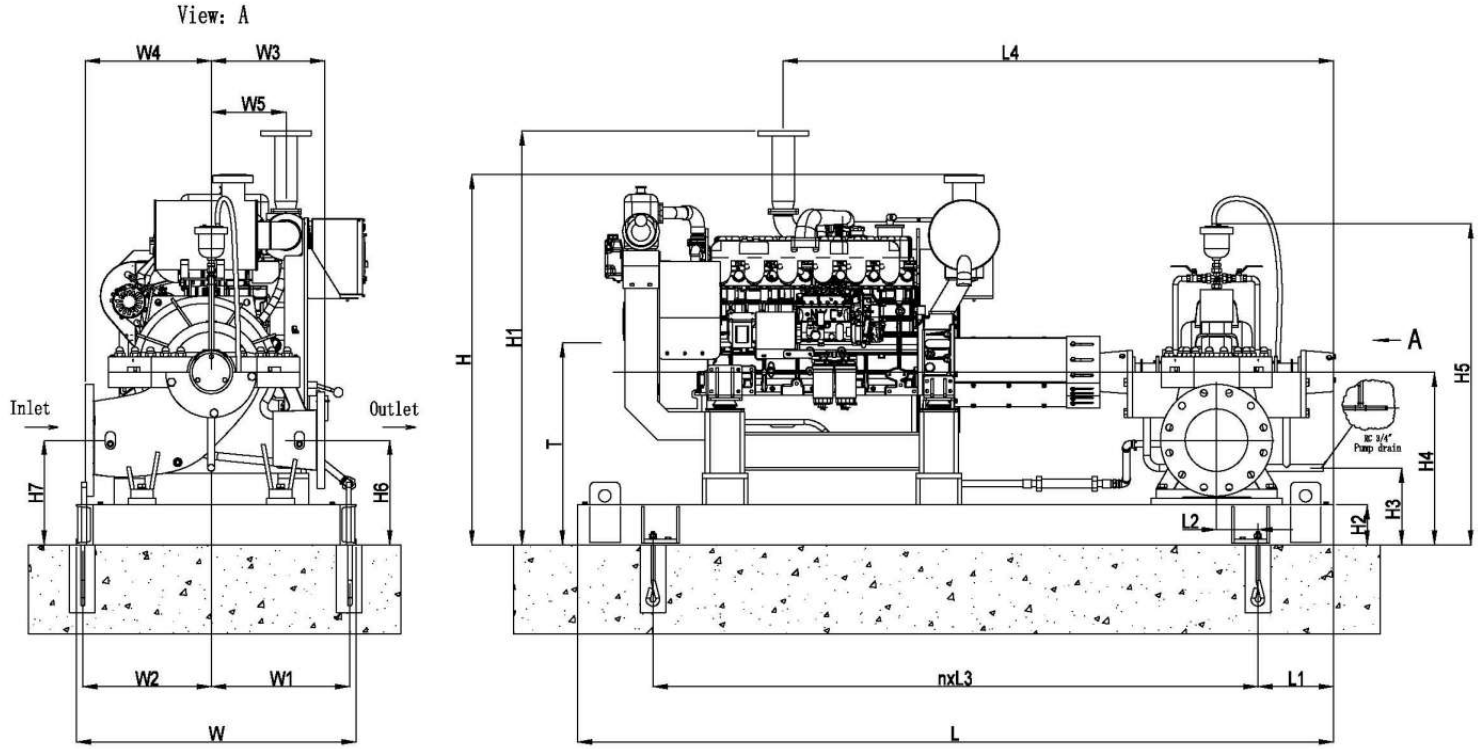

Diesel engine	Dimensions (Unit:mm)																					Anchor bolt	Anchor bolt box
	L	L1	L2	n	L3	L4	W	W1	W2	W3	W4	W5	H	H1	H2	H3	H4	H5	H6	H7	T①		
NM6-114C	2900	250	220	3	800	2175	1250	700	500	420	500	261	1979	1612	140	225	635	1225	385	385	946	8-M16x300	8-120x120x300
NM6-114B	2900	250	220	3	800	2051	1250	675	525	420	500	299	1851	1667	140	225	635	1225	385	385	946	8-M16x300	8-120x120x300
NM6-135B	3200	300	170	4	650	2371	1300	700	550	420	500	371	1730	1747	160	245	655	1245	405	405	845	10-M20x400	10-120x120x400
NM6-135	3200	300	170	4	650	2371	1300	700	550	420	500	371	1730	1747	160	245	655	1245	405	405	845	10-M20x400	10-120x120x400
NM6-127	3000	300	145	3	800	2354	1300	700	550	420	500	307	1490	1747	160	245	655	1245	405	405	830	8-M20x400	8-120x120x400
NM6-128B	3150	300	170	3	850	2419	1350	750	550	420	500	340	1554	1618	160	245	655	1245	405	405	915	8-M20x400	8-120x120x400

①: Oil pump benchmark

The force and torque of the pipe

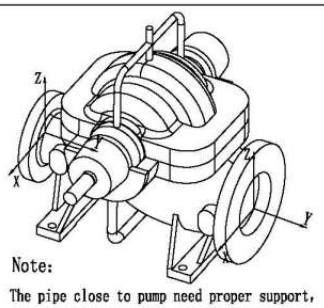

Note:

The pipe close to pump need proper support, Gravity from the inlet and outlet lines shall not be borne by the pump.

Pump Flange	Unit	Axial Direction		
		Fx	Fy	Fz
Inlet (8 INCH)	Pound	850	1100	700
Outlet (6 INCH)	Pound	560	700	460
Inlet (DN 200)	Newton	3780	4890	3110
Outlet (DN 150)	Newton	2490	3110	2050

Pump Flange	Unit	Axial Direction		
		Mx	My	Mz
Inlet (8 INCH)	Pound-Feet	2600	1300	1900
Outlet (6 INCH)	Pound-Feet	1700	870	1300
Inlet (DN 200)	Newton-meter	3530	1760	2580
Outlet (DN 150)	Newton-meter	2300	1180	1760

Flange specification

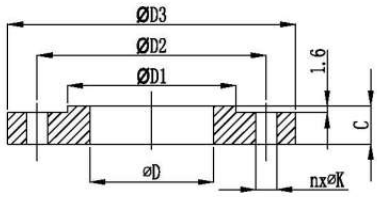

ANSI B16.1 250 Lb RF	ØD	ØD1	ØD2	ØD3	n	ØK	C
Inlet 8 INCH	203.2	303.2	330.2	381.0	12	25.4	41.1
Outlet 6 INCH	154.2	246.1	269.7	317.5	12	22.3	36.5

NOTE : ALL DIMENSIONS AND WEIGHTS ARE PRELIMINARY NOT FOR CONSTRUCTION USE. CERTIFIED AS BUILT DRAWINGS ARE AVAILABLE UPON REQUEST.

The contents of this publication must not be regarded as binding. EBARA ENGINEERING SINGAPORE PTE. LTD. reserves the right to effect any modification it deems necessary, without prior notice.

OUTLINE DIMENSIONS - SINGLE STAGE

DIESEL ENGINE DRIVEN FIRE PUMP SETS

CNPA200-150-600

UL LISTED FM APPROVED

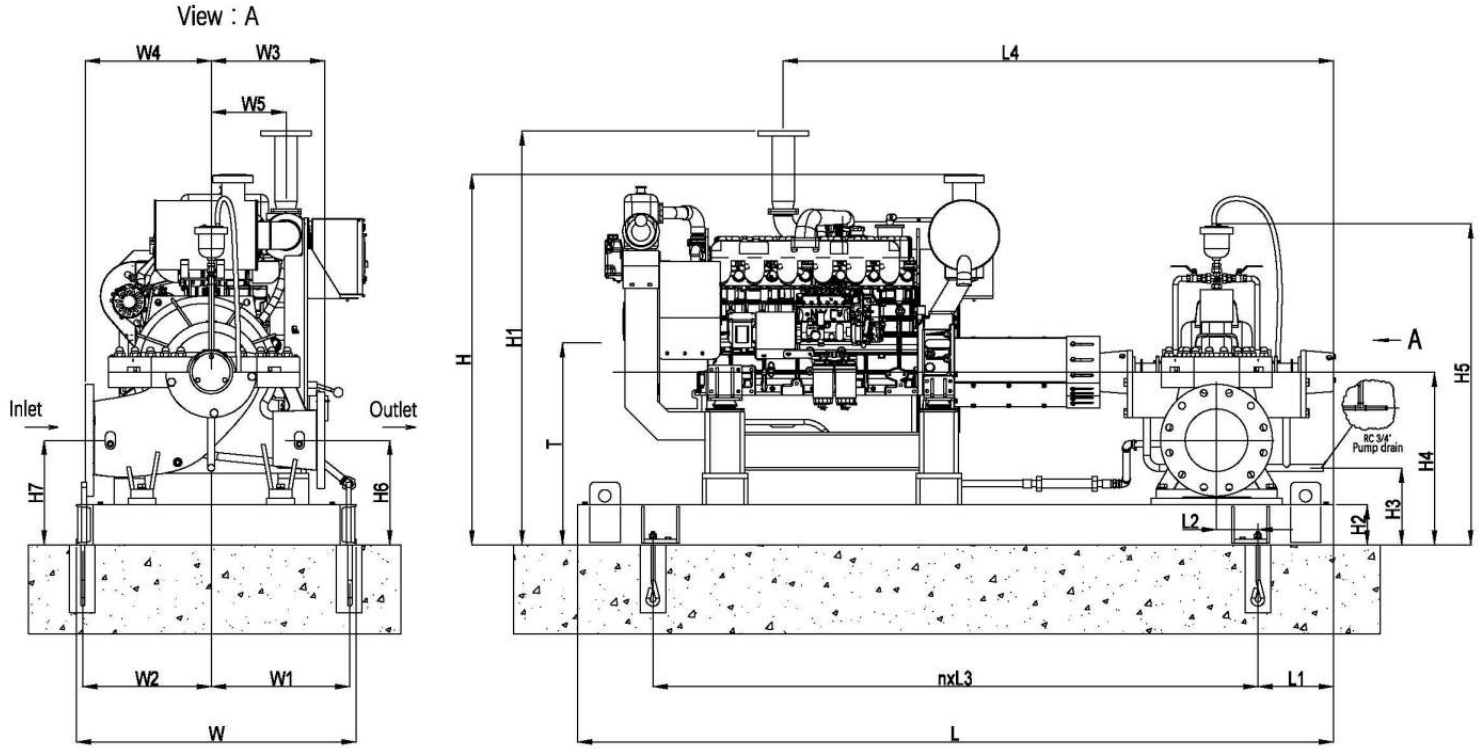

Diesel engine	Dimensions (Unit:mm)																					Anchor bolt	Anchor bolt box
	L	L1	L2	n	L3	L4	W	W1	W2	W3	W4	W5	H	H1	H2	H3	H4	H5	H6	H7	T①		
NM6-114B	2900	295	175	3	770	2051	1300	675	575	480	560	299	1920	1737	160	245	725	1345	425	425	1035	8-M20x400	8-120x120x400
NM6-135	3200	325	155	3	850	2371	1300	675	575	480	560	371	1920	1737	160	245	725	1345	425	425	915	8-M20x400	8-120x120x400
NM6-128	3150	300	190	3	850	2459	1200	525	625	480	560	341	1845	1707	160	245	725	1345	425	425	970	8-M20x400	8-120x120x400

①: Oil pump benchmark

The force and torque of the pipe

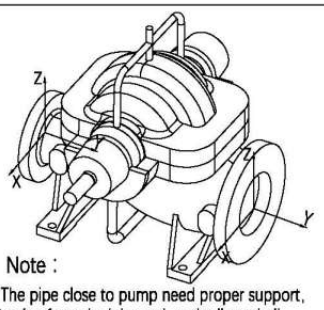

Note :

The pipe close to pump need proper support, Gravity from the inlet and outlet lines shall not be borne by the pump。

Pump Flange	Unit	Axial Direction		
		Fx	Fy	Fz
Inlet (8 INCH)	Pound	850	1100	700
Outlet (6 INCH)	Pound	560	700	460
Inlet (DN 200)	Newton	3780	4890	3110
Outlet (DN 150)	Newton	2490	3110	2050
Pump Flange	**Unit**	**Axial Direction**		
		Mx	My	Mz
Inlet (8 INCH)	Pound-Feet	2600	1300	1900
Outlet (6 INCH)	Pound-Feet	1700	870	1300
Inlet (DN 200)	Newton-meter	3530	1760	2580
Outlet (DN 150)	Newton-meter	2300	1180	1760

Flange specification

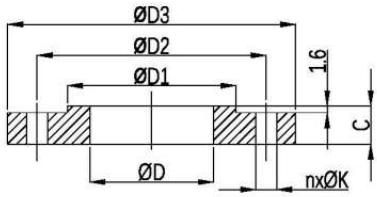

ANSI B16.1 250 Lb RF	ØD	ØD1	ØD2	ØD3	n	ØK	C
Inlet 8 INCH	203.2	303.2	330.2	381.0	12	25.4	41.1
Outlet 6 INCH	154.2	246.1	269.7	317.5	12	22.3	36.5

NOTE : ALL DIMENSIONS AND WEIGHTS ARE PRELIMINARY NOT FOR CONSTRUCTION USE. CERTIFIED AS BUILT DRAWINGS ARE AVAILABLE UPON REQUEST.

The contents of this publication must not be regarded as binding. EBARA ENGINEERING SINGAPORE PTE. LTD. reserves the right to effect any modification it deems necessary, without prior notice.

OUTLINE DIMENSIONS - SINGLE STAGE

DIESEL ENGINE DRIVEN FIRE PUMP SETS

CNPA200-150-640

UL LISTED FM APPROVED

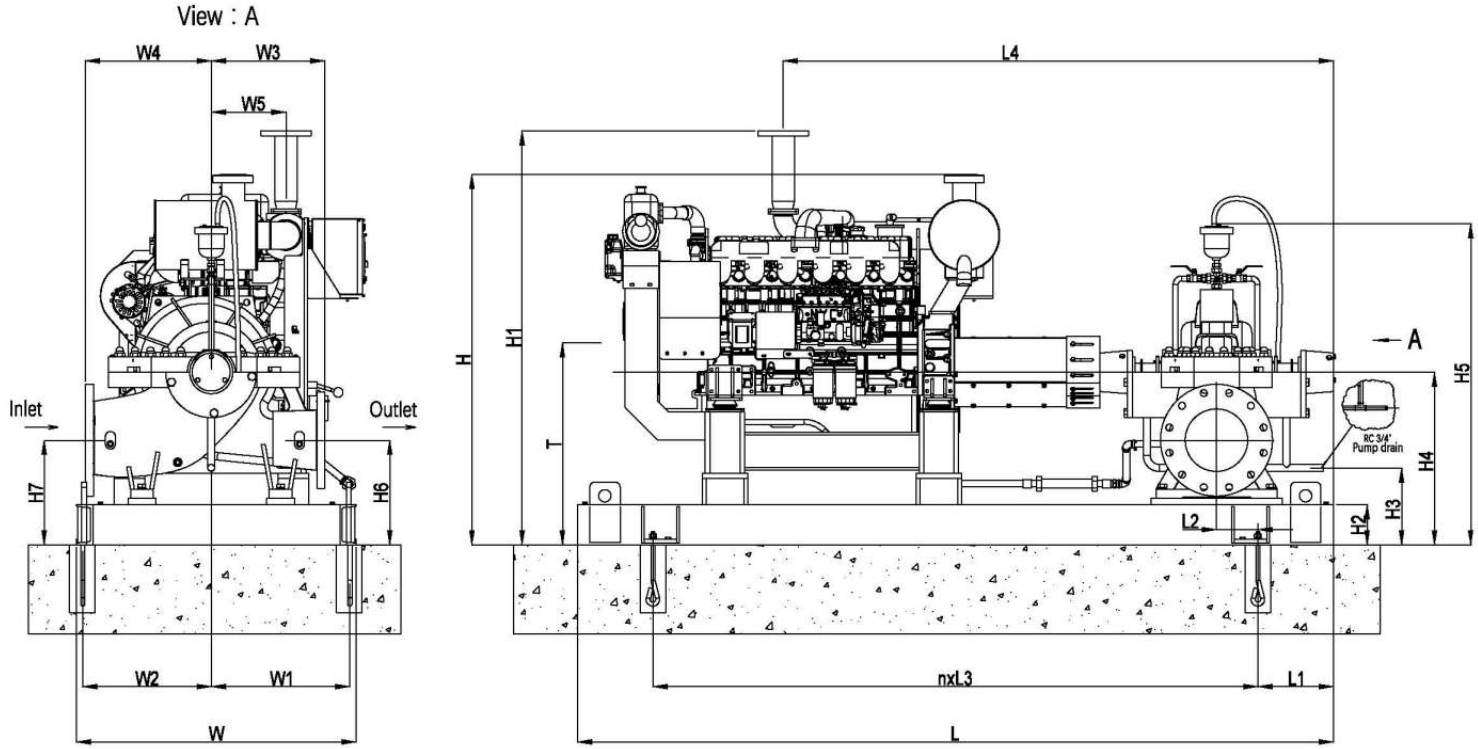

Diesel engine	Dimensions (Unit:mm)																					Anchor bolt	Anchor bolt box
	L	L1	L2	n	L3	L4	W	W1	W2	W3	W4	W5	H	H1	H2	H3	H4	H5	H6	H7	T①		
NM6-114B	3200	300	300	4	650	2302	1400	710	640	500	600	296	1941	1757	160	270	745	1515	395	395	1056	10-M20x400	10-120x120x400
NM6-135	3500	250	350	4	750	2614	1400	725	625	500	600	372	1808	1792	160	270	745	1515	395	395	935	10-M20x400	10-120x120x400
NM6-135B	3500	250	350	4	750	2614	1400	725	625	500	600	372	1808	1792	160	270	745	1515	395	395	935	10-M20x400	10-120x120x400
NM6-128	3400	300	300	4	700	2694	1200	525	625	500	600	340	1845	1707	160	270	745	1515	395	395	1010	10-M20x400	10-120x120x400
NM8-128	3200	300	300	4	650	1600	1500	735	715	500	600	591	1644	1454	160	270	745	1515	395	395	1080	10-M20x400	10-120x120x400
NM10-128	3400	300	300	4	700	1710	1500	770	680	500	600	540	1780	1668	160	270	745	1515	395	395	1080	10-M20x400	10-120x120x400
NM12-128	3600	300	300	4	750	1710	1500	770	680	500	600	540	1820	1708	180	290	765	1535	415	415	1100	10-M20x400	10-120x120x400

①: Oil pump benchmark

The force and torque of the pipe

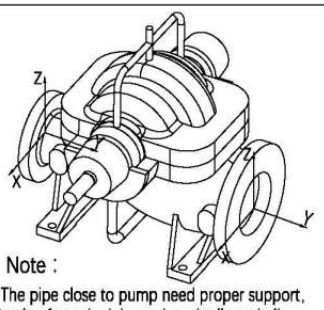

Note :

The pipe close to pump need proper support, Gravity from the inlet and outlet lines shall not be borne by the pump。

Pump Flange	Unit	Axial Direction		
		Fx	Fy	Fz
Inlet (8 INCH)	Pound	850	1100	700
Outlet (6 INCH)	Pound	560	700	460
Inlet (DN 200)	Newton	3780	4890	3110
Outlet (DN 150)	Newton	2490	3110	2050
Pump Flange	**Unit**	**Axial Direction**		
		Mx	My	Mz
Inlet (8 INCH)	Pound-Feet	2600	1300	1900
Outlet (6 INCH)	Pound-Feet	1700	870	1300
Inlet (DN 200)	Newton-meter	3530	1760	2580
Outlet (DN 150)	Newton-meter	2300	1180	1760

Flange specification

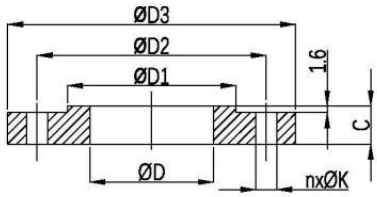

ANSI B16.1 250 Lb RF	ØD	ØD1	ØD2	ØD3	n	ØK	C
Inlet 8 INCH	203.2	303.2	330.2	381.0	12	25.4	41.1
Outlet 6 INCH	154.2	246.1	269.7	317.5	12	22.3	36.5

NOTE : ALL DIMENSIONS AND WEIGHTS ARE PRELIMINARY NOT FOR CONSTRUCTION USE. CERTIFIED AS BUILT DRAWINGS ARE AVAILABLE UPON REQUEST.

The contents of this publication must not be regarded as binding. EBARA ENGINEERING SINGAPORE PTE. LTD. reserves the right to effect any modification it deems necessary, without prior notice.

OUTLINE DIMENSIONS - SINGLE STAGE

DIESEL ENGINE DRIVEN FIRE PUMP SETS

CNPA250-200-350

UL LISTED FM APPROVED

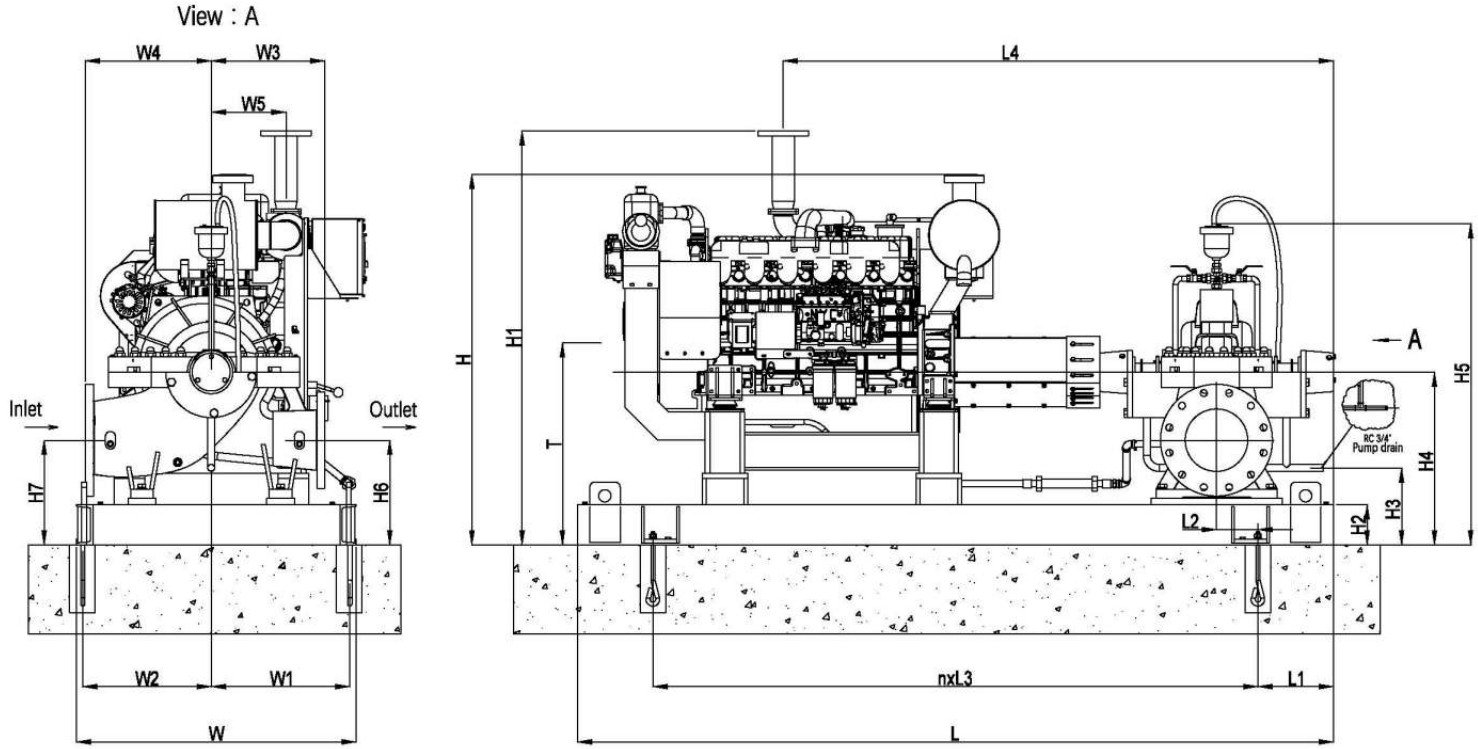

Diesel engine	Dimensions (Unit:mm)																					Anchor bolt	Anchor bolt box
	L	L1	L2	n	L3	L4	W	W1	W2	W3	W4	W5	H	H1	H2	H3	H4	H5	H6	H7	T①		
NM6-110D	3100	275	225	3	850	2299	1250	675	525	450	500	318	1783	1702	160	245	685	1435	415	415	795	10-M20x400	10-120x120x400
NM6-108E	3050	250	255	3	850	2222	1150	585	515	450	500	318	1599	1730	140	225	665	1415	395	395	830	10-M20x400	10-120x120x400

①: Oil pump benchmark

The force and torque of the pipe

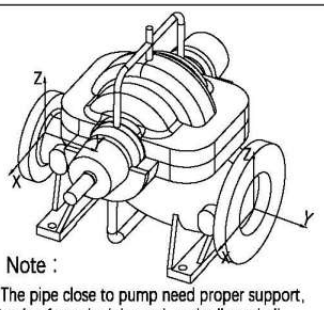

Note :

The pipe close to pump need proper support, Gravity from the inlet and outlet lines shall not be borne by the pump。

Pump Flange	Unit	Axial Direction		
		Fx	Fy	Fz
Inlet (10 INCH)	Pound	1200	1500	1000
Outlet (8 INCH)	Pound	850	1100	700
Inlet (DN 250)	Newton	5340	6670	4450
Outlet (DN 200)	Newton	3780	4890	3110
Pump Flange	Unit	Axial Direction		
		Mx	My	Mz
Inlet (10 INCH)	Pound-Feet	3700	1800	2800
Outlet (8 INCH)	Pound-Feet	2600	1300	1900
Inlet (DN 250)	Newton-meter	5020	2440	3800
Outlet (DN 200)	Newton-meter	3530	1760	2580

Flange specification

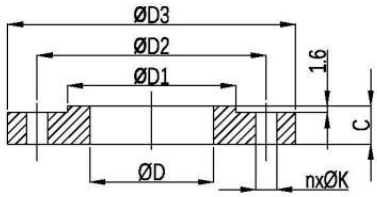

ANSI B16.1 250 Lb RF	ØD	ØD1	ØD2	ØD3	n	ØK	C
Inlet 10 INCH	254.5	357.1	387.3	444.5	16	28.4	47.7
Outlet 8 INCH	203.2	303.2	330.2	381.0	12	25.4	41.1

NOTE : ALL DIMENSIONS AND WEIGHTS ARE PRELIMINARY NOT FOR CONSTRUCTION USE. CERTIFIED AS BUILT DRAWINGS ARE AVAILABLE UPON REQUEST.

The contents of this publication must not be regarded as binding. EBARA ENGINEERING SINGAPORE PTE. LTD. reserves the right to effect any modification it deems necessary, without prior notice.

OUTLINE DIMENSIONS - SINGLE STAGE

DIESEL ENGINE DRIVEN FIRE PUMP SETS

CNPA250-200-450

UL LISTED FM APPROVED

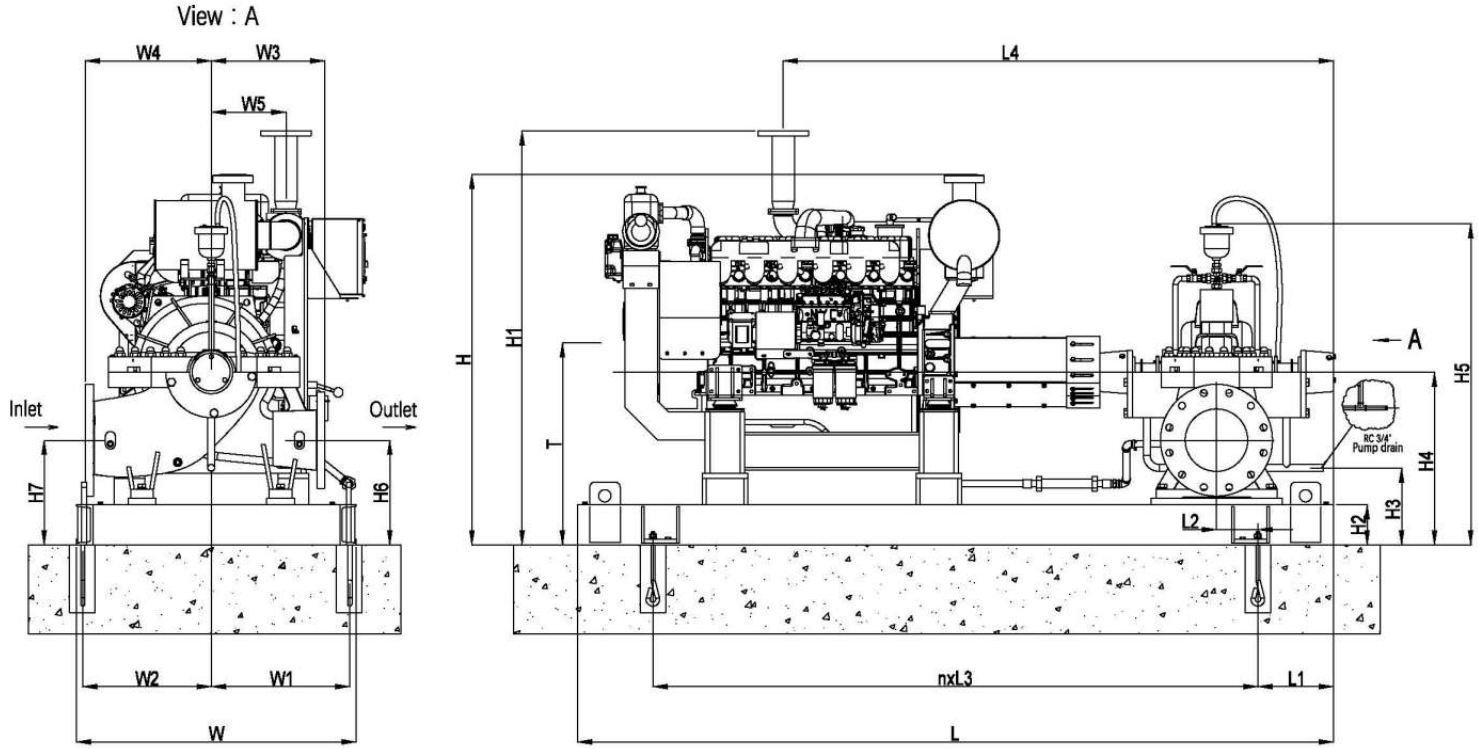

Diesel engine	Dimensions (Unit:mm)																					Anchor bolt	Anchor bolt box
	L	L1	L2	n	L3	L4	W	W1	W2	W3	W4	W5	H	H1	H2	H3	H4	H5	H6	H7	T①		
NM6-114B	2900	280	180	3	780	2140	1300	675	575	400	500	299	1910	1717	160	245	705	1320	425	425	1020	8-M20x400	8-120x120x400
NM6-128B	3200	325	145	3	850	2503	1400	725	625	400	500	340	1605	1668	160	245	705	1320	425	425	965	8-M20x400	8-120x120x400
NM6-128	3150	300	190	3	850	2380	1150	525	575	400	500	340	1803	1665	160	245	705	1320	425	425	965	8-M20x400	8-120x120x400
NM8-128	3200	325	145	3	850	1505	1400	690	660	400	500	528	1516	1572	160	290	750	1365	470	470	1070	8-M20x400	8-120x120x400
NM10-128	3300	250	220	4	700	1476	1400	690	660	400	500	539	1536	1673	160	290	750	1365	470	470	1090	10-M20x400	10-120x120x400
NM6-135B	3200	325	145	3	850	2334	1300	675	575	400	500	372	1800	1867	160	245	705	1320	425	425	1020	8-M20x400	8-120x120x400
NM6-135	3200	325	145	3	850	2334	1300	675	575	400	500	372	1800	1867	160	245	705	1320	425	425	1020	8-M20x400	8-120x120x400

①: Oil pump benchmark

The force and torque of the pipe

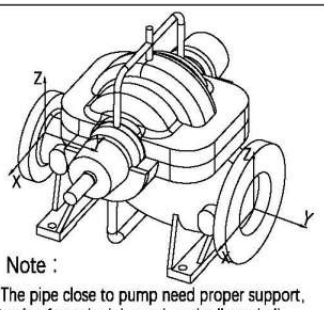

Note :

The pipe close to pump need proper support, Gravity from the inlet and outlet lines shall not be borne by the pump。

Pump Flange	Unit	Axial Direction		
		Fx	Fy	Fz
Inlet (10 INCH)	Pound	1200	1500	1000
Outlet (8 INCH)	Pound	850	1100	700
Inlet (DN 250)	Newton	5340	6670	4450
Outlet (DN 200)	Newton	3780	4890	3110
Pump Flange	**Unit**	**Axial Direction**		
		Mx	My	Mz
Inlet (10 INCH)	Pound-Feet	3700	1800	2800
Outlet (8 INCH)	Pound-Feet	2600	1300	1900
Inlet (DN 250)	Newton-meter	5020	2440	3800
Outlet (DN 200)	Newton-meter	3530	1760	2580

Flange specification

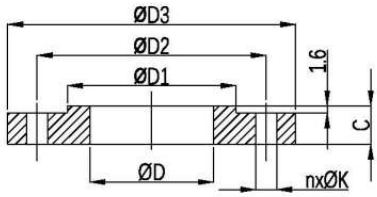

ANSI B16.1 250 Lb RF	ØD	ØD1	ØD2	ØD3	n	ØK	C
Inlet 10 INCH	254.5	357.1	387.3	444.5	16	28.4	47.7
Outlet 8 INCH	203.2	303.2	330.2	381.0	12	25.4	41.1

NOTE : ALL DIMENSIONS AND WEIGHTS ARE PRELIMINARY NOT FOR CONSTRUCTION USE. CERTIFIED AS BUILT DRAWINGS ARE AVAILABLE UPON REQUEST.

The contents of this publication must not be regarded as binding. EBARA ENGINEERING SINGAPORE PTE. LTD. reserves the right to effect any modification it deems necessary, without prior notice.

OUTLINE DIMENSIONS - SINGLE STAGE

DIESEL ENGINE DRIVEN FIRE PUMP SETS

CNPA250-200-500

UL LISTED FM APPROVED

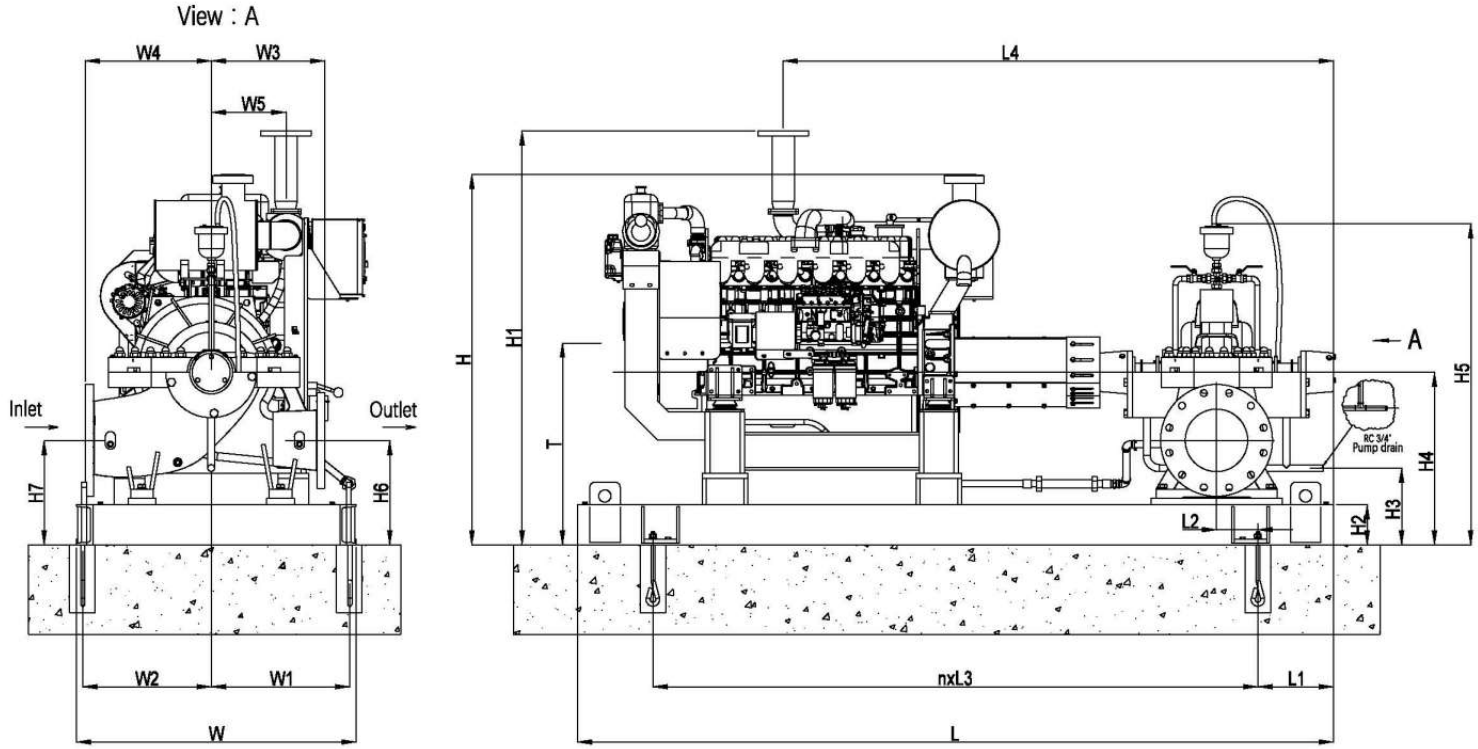

Diesel engine	Dimensions (Unit:mm)																					Anchor bolt	Anchor bolt box
	L	L1	L2	n	L3	L4	W	W1	W2	W3	W4	W5	H	H1	H2	H3	H4	H5	H6	H7	T①		
NM6-128B	3100	275	275	3	850	2388	1200	575	575	450	550	221	2020	1723	160	255	735	1535	425	425	995	8-M20x400	8-120x120x400
NM6-128	3300	250	310	4	700	2604	1300	625	625	450	550	340	1833	1698	160	255	735	1535	425	425	995	10-M20x400	10-120x120x400
NM8-128	3300	250	300	4	700	1610	1400	675	675	450	550	528	1826	1593	160	270	750	1550	440	440	1090	10-M20x400	10-120x120x400
NM10-128	3500	300	250	4	725	1719	1400	675	675	450	550	540	2023	1673	160	270	750	1550	440	440	1090	10-M20x400	10-120x120x400
NM12-128	3700	300	250	4	775	1719	1400	675	675	450	550	540	2023	1673	160	270	750	1550	440	440	1090	10-M20x400	10-120x120x400
NM6-135B	3400	250	300	4	725	2534	1300	675	575	450	550	372	1800	1867	160	255	735	1535	425	425	1035	10-M20x400	10-120x120x400
NM6-135	3400	250	300	4	725	2534	1300	675	575	450	550	372	1800	1867	160	255	735	1535	425	425	1035	10-M20x400	10-120x120x400
NM6-127	3100	275	275	3	850	2538	1300	675	575	450	550	307	1570	1760	160	255	735	1535	425	425	905	8-M20x400	8-120x120x400

The force and torque of the pipe

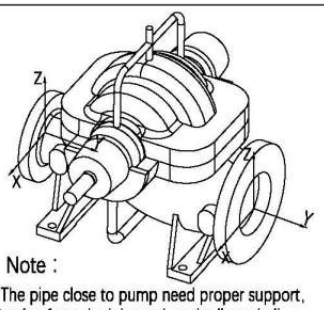

Note :

The pipe close to pump need proper support, Gravity from the inlet and outlet lines shall not be borne by the pump。

Pump Flange	Unit	Axial Direction		
		Fx	Fy	Fz
Inlet (10 INCH)	Pound	1200	1500	1000
Outlet (8 INCH)	Pound	850	1100	700
Inlet (DN 250)	Newton	5340	6670	4450
Outlet (DN 200)	Newton	3780	4890	3110
Pump Flange	Unit	Axial Direction		
		Mx	My	Mz
Inlet (10 INCH)	Pound-Feet	3700	1800	2800
Outlet (8 INCH)	Pound-Feet	2600	1300	1900
Inlet (DN 250)	Newton-meter	5020	2440	3800
Outlet (DN 200)	Newton-meter	3530	1760	2580

Flange specification

①: Oil pump benchmark

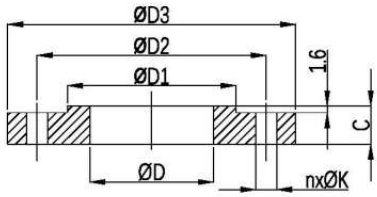

ANSI B16.1 250 Lb RF	ØD	ØD1	ØD2	ØD3	n	ØK	C
Inlet 10 INCH	254.5	357.1	387.3	444.5	16	28.4	47.7
Outlet 8 INCH	203.2	303.2	330.2	381.0	12	25.4	41.1

NOTE : ALL DIMENSIONS AND WEIGHTS ARE PRELIMINARY NOT FOR CONSTRUCTION USE. CERTIFIED AS BUILT DRAWINGS ARE AVAILABLE UPON REQUEST.

The contents of this publication must not be regarded as binding. EBARA ENGINEERING SINGAPORE PTE. LTD. reserves the right to effect any modification it deems necessary, without prior notice.

OUTLINE DIMENSIONS - SINGLE STAGE

DIESEL ENGINE DRIVEN FIRE PUMP SETS

CNPA250-200-500S

UL LISTED FM APPROVED

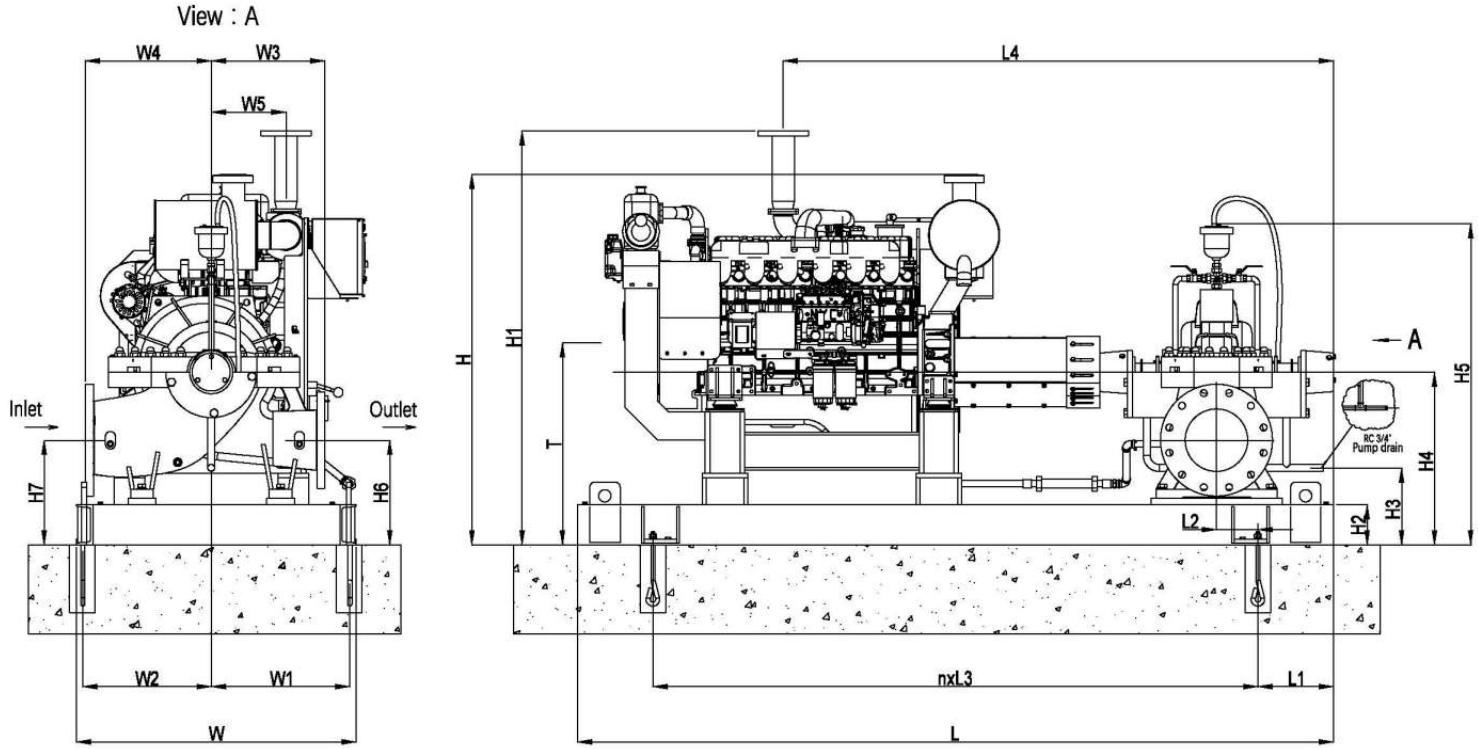

Diesel engine	Dimensions (Unit:mm)																					Anchor bolt	Anchor bolt box
	L	L1	L2	n	L3	L4	W	W1	W2	W3	W4	W5	H	H1	H2	H3	H4	H5	H6	H7	T①		
NM6-114	3100	275	275	3	850	2394	1300	690	560	450	550	261	1904	1737	160	255	735	1535	425	425	1035	8-M20x400	8-120x120x400
NM6-128B	3100	275	275	3	850	2388	1200	575	575	450	550	221	2020	1723	160	255	735	1535	425	425	995	8-M20x400	8-120x120x400
NM6-128	3300	250	310	4	700	2604	1300	625	625	450	550	340	1833	1698	160	255	735	1535	425	425	995	10-M20x400	10-120x120x400
NM8-128	3300	250	300	4	700	1610	1400	675	675	450	550	528	1826	1593	160	270	750	1550	440	440	1090	10-M20x400	10-120x120x400
NM10-128	3500	300	250	4	725	1719	1400	675	675	450	550	540	2023	1673	160	270	750	1550	440	440	1090	10-M20x400	10-120x120x400
NM12-128	3700	300	250	4	775	1719	1400	675	675	450	550	540	2023	1673	160	270	750	1550	440	440	1090	10-M20x400	10-120x120x400
NM6-135B	3400	250	300	4	725	2534	1300	675	575	450	550	372	1800	1867	160	255	735	1535	425	425	1035	10-M20x400	10-120x120x400
NM6-135	3400	250	300	4	725	2534	1300	675	575	450	550	372	1800	1867	160	255	735	1535	425	425	1035	10-M20x400	10-120x120x400

The force and torque of the pipe

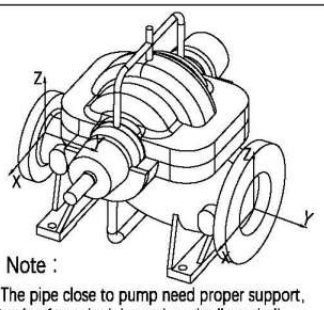

Note :

The pipe close to pump need proper support, Gravity from the inlet and outlet lines shall not be borne by the pump。

Pump Flange	Unit	Axial Direction		
		Fx	Fy	Fz
Inlet (10 INCH)	Pound	1200	1500	1000
Outlet (8 INCH)	Pound	850	1100	700
Inlet (DN 250)	Newton	5340	6670	4450
Outlet (DN 200)	Newton	3780	4890	3110
Pump Flange	**Unit**	**Axial Direction**		
		Mx	My	Mz
Inlet (10 INCH)	Pound-Feet	3700	1800	2800
Outlet (8 INCH)	Pound-Feet	2600	1300	1900
Inlet (DN 250)	Newton-meter	5020	2440	3800
Outlet (DN 200)	Newton-meter	3530	1760	2580

Flange specification

①: Oil pump benchmark

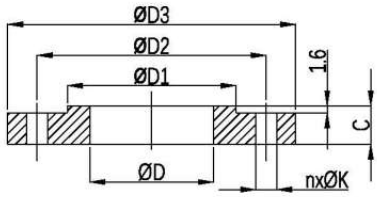

ANSI B16.1 250 Lb RF	ØD	ØD1	ØD2	ØD3	n	ØK	C
Inlet 10 INCH	254.5	357.1	387.3	444.5	16	28.4	47.7
Outlet 8 INCH	203.2	303.2	330.2	381.0	12	25.4	41.1

NOTE : ALL DIMENSIONS AND WEIGHTS ARE PRELIMINARY NOT FOR CONSTRUCTION USE. CERTIFIED AS BUILT DRAWINGS ARE AVAILABLE UPON REQUEST.

The contents of this publication must not be regarded as binding. EBARA ENGINEERING SINGAPORE PTE. LTD. reserves the right to effect any modification it deems necessary, without prior notice.

OUTLINE DIMENSIONS - SINGLE STAGE

DIESEL ENGINE DRIVEN FIRE PUMP SETS

CNPA250-200-600	UL LISTED FM APPROVED

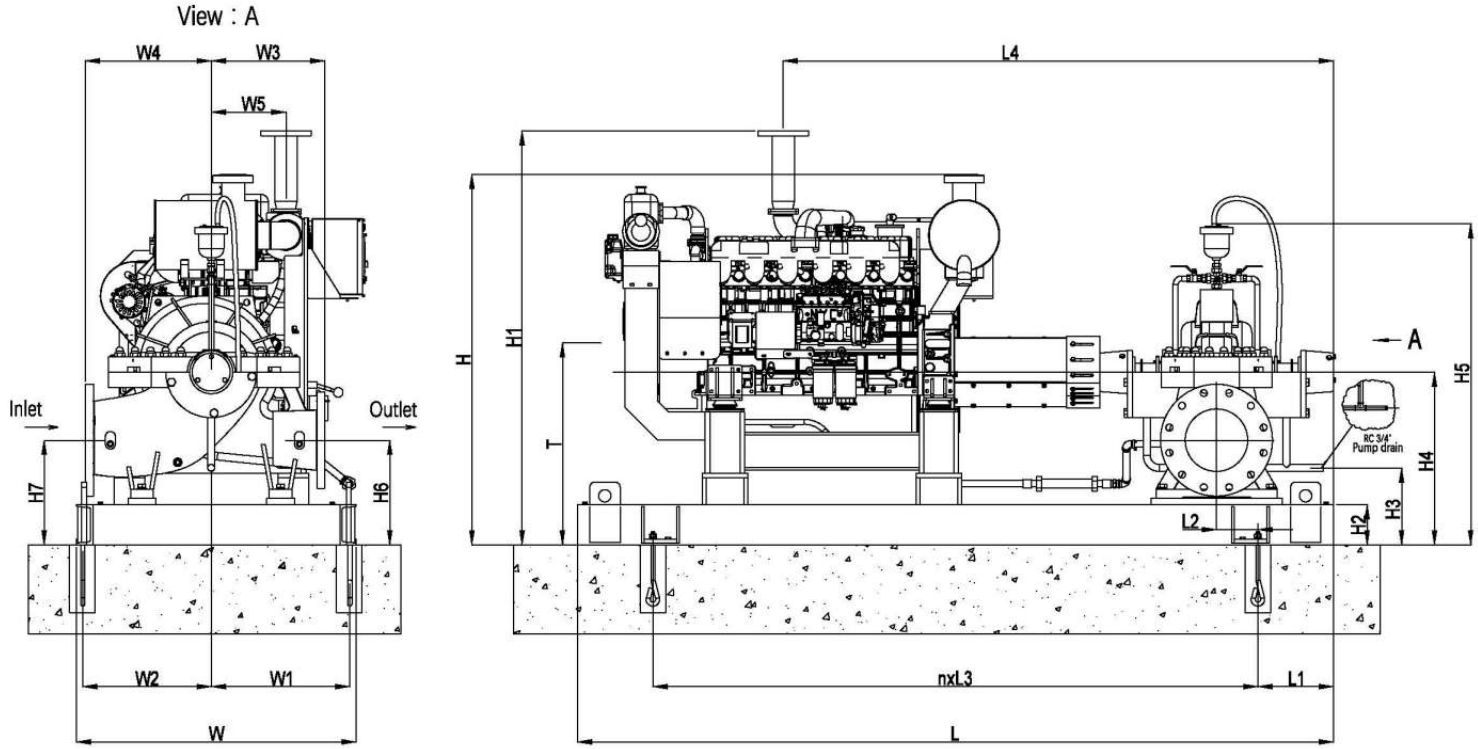

Diesel engine	Dimensions (Unit:mm)																					Anchor bolt	Anchor bolt box
	L	L1	L2	n	L3	L4	W	W1	W2	W3	W4	W5	H	H1	H2	H3	H4	H5	H6	H7	T①		
NM6-128	3300	250	300	4	700	2647	1350	600	700	500	600	340	1873	1735	160	245	775	1492	425	425	1035	10-M20x400	10-120x120x400
NM8-128	3400	250	300	4	725	1727	1400	675	675	500	600	528	1866	1635	160	245	775	1492	425	425	1115	10-M20x400	10-120x120x400
NM10-128	3600	280	270	4	760	1763	1400	675	675	500	600	540	2067	1718	160	245	775	1492	425	425	1115	10-M20x400	10-120x120x400
NM12-128	3600	300	250	4	775	1743	1450	720	670	500	600	540	2087	1738	180	245	795	1512	445	445	1130	10-M20x400	10-120x120x400
NM6-135B	3400	250	300	4	725	2534	1400	675	675	500	600	372	1800	1867	160	245	775	1492	425	425	965	10-M20x400	10-120x120x400
NM6-135	3400	250	300	4	725	2534	1400	675	675	500	600	372	1800	1867	160	245	775	1492	425	425	965	10-M20x400	10-120x120x400

①: Oil pump benchmark

The force and torque of the pipe

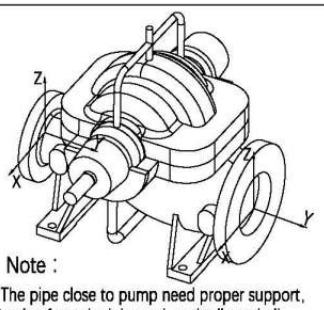

Note :

The pipe close to pump need proper support, Gravity from the inlet and outlet lines shall not be borne by the pump。

Pump Flange	Unit	Axial Direction		
		Fx	Fy	Fz
Inlet (10 INCH)	Pound	1200	1500	1000
Outlet (8 INCH)	Pound	850	1100	700
Inlet (DN 250)	Newton	5340	6670	4450
Outlet (DN 200)	Newton	3780	4890	3110
Pump Flange	Unit	Axial Direction		
		Mx	My	Mz
Inlet (10 INCH)	Pound-Feet	3700	1800	2800
Outlet (8 INCH)	Pound-Feet	2600	1300	1900
Inlet (DN 250)	Newton-meter	5020	2440	3800
Outlet (DN 200)	Newton-meter	3530	2760	2580

Flange specification

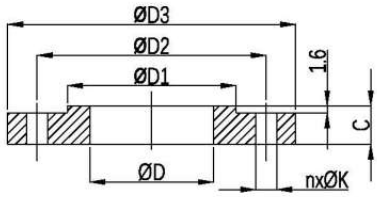

ANSI B16.1 250 Lb RF	ØD	ØD1	ØD2	ØD3	n	ØK	C
Inlet 10 INCH	254.5	357.1	387.3	444.5	16	28.4	47.7
Outlet 8 INCH	203.2	303.2	330.2	381.0	12	25.4	41.1

NOTE : ALL DIMENSIONS AND WEIGHTS ARE PRELIMINARY NOT FOR CONSTRUCTION USE. CERTIFIED AS BUILT DRAWINGS ARE AVAILABLE UPON REQUEST.

The contents of this publication must not be regarded as binding. EBARA ENGINEERING SINGAPORE PTE. LTD. reserves the right to effect any modification it deems necessary, without prior notice.

OUTLINE DIMENSIONS - SINGLE STAGE

DIESEL ENGINE DRIVEN FIRE PUMP SETS

CNPA300-250-500

UL LISTED FM APPROVED

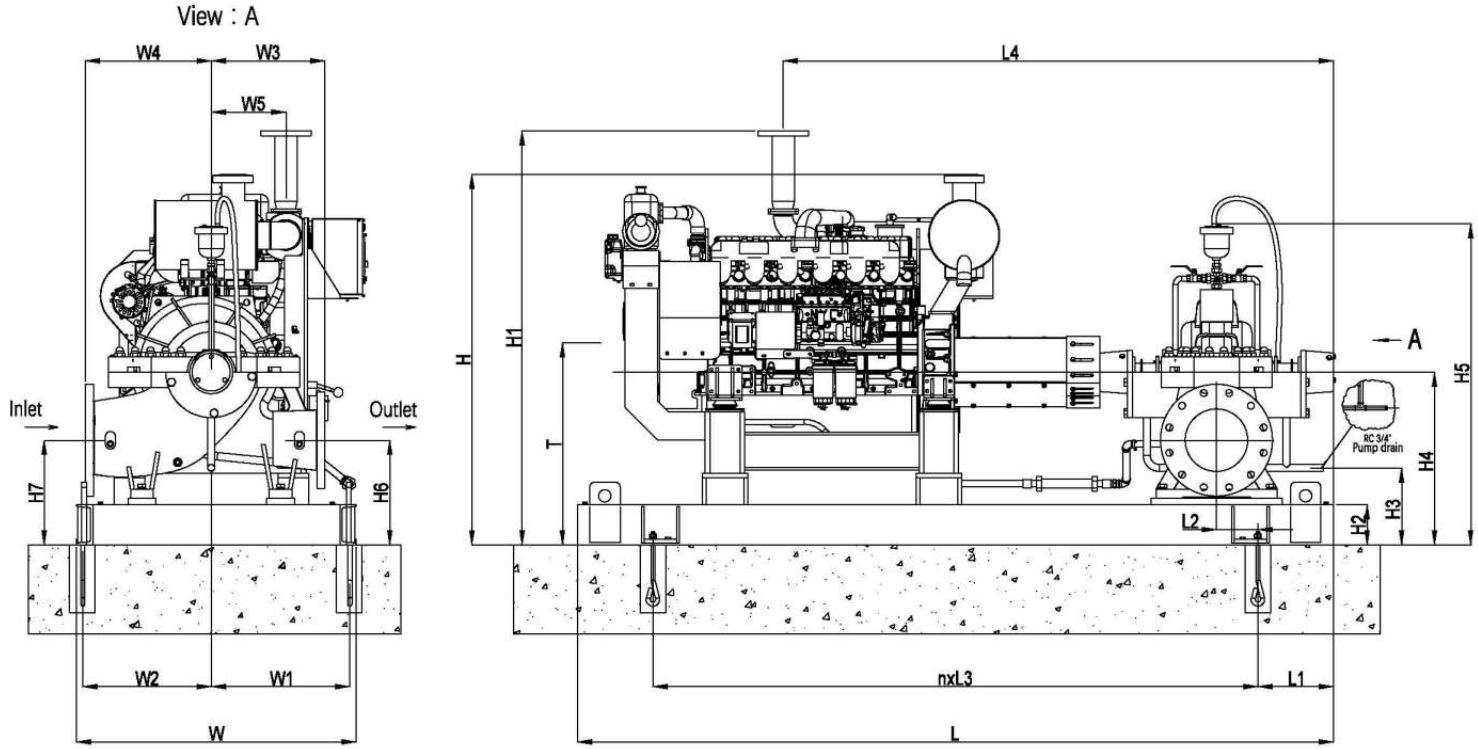

Diesel engine	Dimensions (Unit:mm)																					Anchor bolt	Anchor bolt box
	L	L1	L2	n	L3	L4	W	W1	W2	W3	W4	W5	H	H1	H2	H3	H4	H5	H6	H7	T①		
NM6-128	3500	250	360	4	750	2739	1500	755	695	550	650	340	1759	1823	160	270	860	1574	490	490	1120	10-M20x400	10-120x120x400
NM8-128	3500	250	360	4	750	1819	1400	650	690	550	650	528	1951	1720	180	290	880	1594	510	510	1220	10-M20x400	10-120x120x400
NM10-128	3700	250	400	4	800	1877	1400	650	690	550	650	540	2152	1803	180	290	880	1594	510	510	1220	10-M20x400	10-120x120x400
NM12-128	3750	275	370	4	800	1870	1450	655	735	550	650	540	2152	1803	180	290	880	1594	510	510	1220	10-M20x400	10-120x120x400
NM12-128B	3850	275	370	4	825	1870	1450	655	735	550	650	553	2213	1802	180	290	880	1594	510	510	1220	10-M20x400	10-120x120x400
NM12-128C	3850	275	370	4	825	1870	1450	655	735	550	650	553	2213	1802	180	290	880	1594	510	510	1220	10-M20x400	10-120x120x400
NM6-127	3200	325	285	3	850	2739	1400	675	675	550	650	307	1695	1885	160	270	860	1574	490	490	1030	8-M20x400	8-120x120x400

①: Oil pump benchmark

The force and torque of the pipe

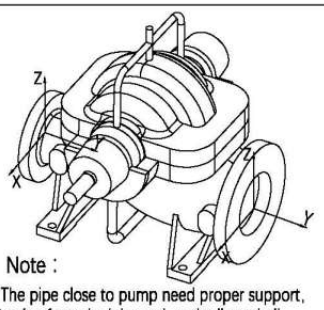

Note :

The pipe close to pump need proper support, Gravity from the inlet and outlet lines shall not be borne by the pump。

Pump Flange	Unit	Axial Direction		
		Fx	Fy	Fz
Inlet (12 INCH)	Pound	1500	1800	1200
Outlet (10 INCH)	Pound	1200	1500	1000
Inlet (DN 300)	Newton	6670	8000	5340
Outlet (DN 250)	Newton	5340	6670	4450
Pump Flange	**Unit**	**Axial Direction**		
		Mx	My	Mz
Inlet (12 INCH)	Pound-Feet	4500	2200	3400
Outlet (10 INCH)	Pound-Feet	3700	1800	2800
Inlet (DN 300)	Newton-meter	6100	2980	4610
Outlet (DN 250)	Newton-meter	5020	2440	3800

Flange specification

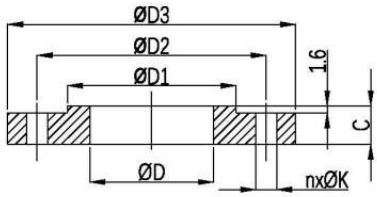

ANSI B16.1 250 Lb RF	ØD	ØD1	ØD2	ØD3	n	ØK	C
Inlet 12 INCH	304.8	417.6	450.8	520.7	16	31.7	50.8
Outlet 10 INCH	254.5	357.1	387.3	444.5	16	28.4	47.7

NOTE : ALL DIMENSIONS AND WEIGHTS ARE PRELIMINARY NOT FOR CONSTRUCTION USE. CERTIFIED AS BUILT DRAWINGS ARE AVAILABLE UPON REQUEST.

The contents of this publication must not be regarded as binding. EBARA ENGINEERING SINGAPORE PTE. LTD. reserves the right to effect any modification it deems necessary, without prior notice.

OUTLINE DIMENSIONS - SINGLE STAGE

DIESEL ENGINE DRIVEN FIRE PUMP SETS

CNPA300-250-600

UL LISTED FM APPROVED

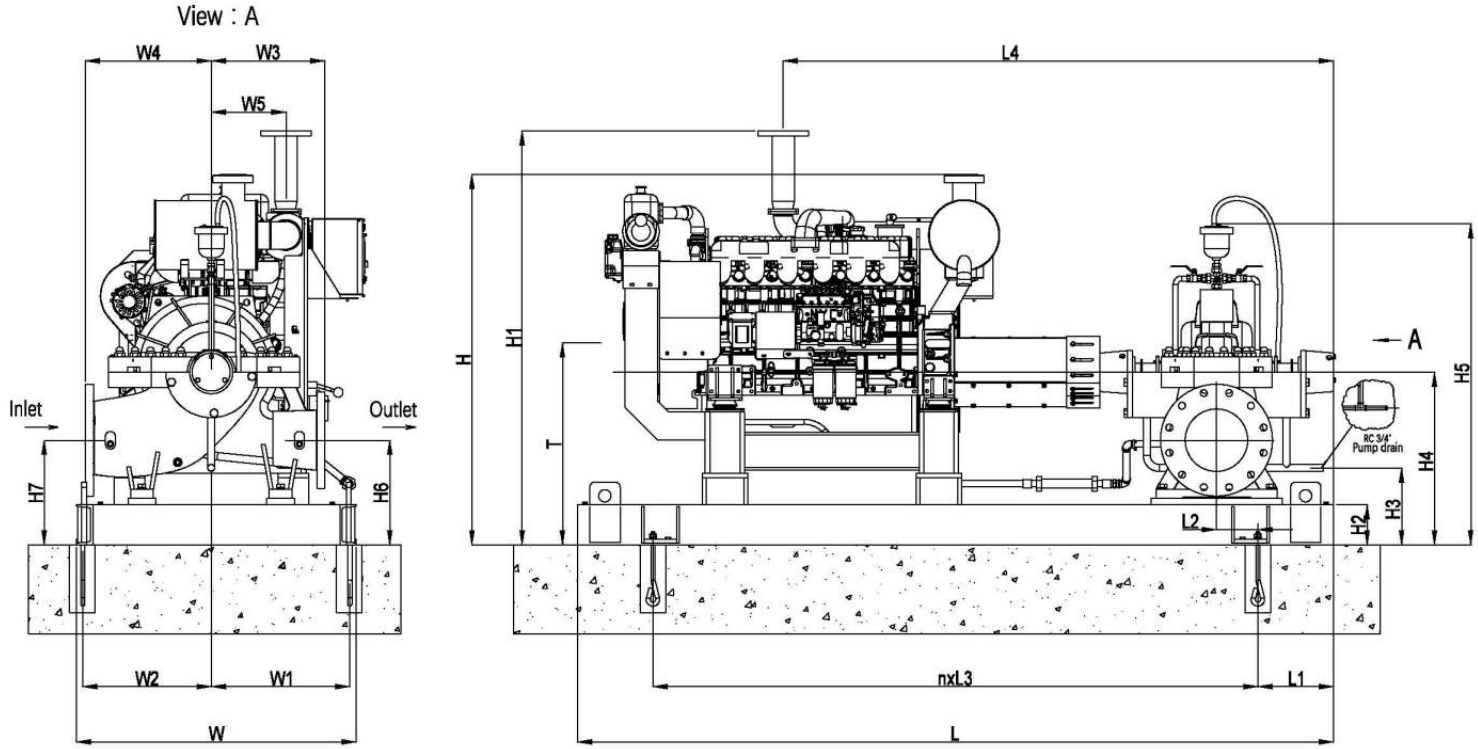

Diesel engine	Dimensions (Unit:mm)																					Anchor bolt	Anchor bolt box
	L	L1	L2	n	L3	L4	W	W1	W2	W3	W4	W5	H	H1	H2	H3	H4	H5	H6	H7	T①		
NM6-159	3700	300	300	4	775	2870	1500	720	720	550	650	324	2270	2370	180	290	880	1660	480	480	1000	10-M20x400	10-120x120x400
NM12-128	3700	300	300	4	775	1815	1500	720	720	550	650	539/539	2165	1803	180	290	880	1750	480	480	1220	10-M20x400	10-120x120x400
NM6-159B	3800	300	300	4	800	2870	1550	770	720	550	650	322	2245	2375	180	290	880	1750	480	480	1000	10-M20x400	10-120x120x400
NM12-128B	3800	300	300	4	800	1556	1600	820	720	550	650	383/383	2175	1790	180	290	880	1750	480	480	1220	10-M20x400	10-120x120x400
NM12-128C	3800	300	300	4	800	1556	1600	820	720	550	650	383/383	2175	1790	180	290	880	1750	480	480	1220	10-M20x400	10-120x120x400
NM12-159B	4200	300	300	4	900	2270/3470	1600	820	720	550	650	379/379	2595	2480	220	330	920	1790	520	520	855	10-M30x630	10-150x150x630

①: Oil pump benchmark

The force and torque of the pipe

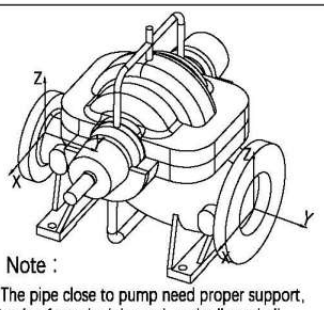

Note :

The pipe close to pump need proper support, Gravity from the inlet and outlet lines shall not be borne by the pump。

Pump Flange	Unit	Axial Direction		
		Fx	Fy	Fz
Inlet (12 INCH)	Pound	1500	1800	1200
Outlet (10 INCH)	Pound	1200	1500	1000
Inlet (DN 300)	Newton	6670	8000	5340
Outlet (DN 250)	Newton	5340	6670	4450
Pump Flange	**Unit**	**Axial Direction**		
		Mx	My	Mz
Inlet (12 INCH)	Pound-Feet	4500	2200	3400
Outlet (10 INCH)	Pound-Feet	3700	1800	2800
Inlet (DN 300)	Newton-meter	6100	2980	4610
Outlet (DN 250)	Newton-meter	5020	2440	3800

Flange specification

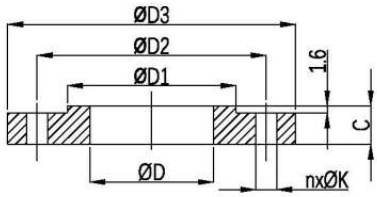

ANSI B16.1 250 Lb RF	ØD	ØD1	ØD2	ØD3	n	ØK	C
Inlet 12 INCH	304.8	417.6	450.8	520.7	16	31.7	50.8
Outlet 10 INCH	254.5	357.1	387.3	444.5	16	28.4	47.7

NOTE : ALL DIMENSIONS AND WEIGHTS ARE PRELIMINARY NOT FOR CONSTRUCTION USE. CERTIFIED AS BUILT DRAWINGS ARE AVAILABLE UPON REQUEST.

The contents of this publication must not be regarded as binding. EBARA ENGINEERING SINGAPORE PTE. LTD. reserves the right to effect any modification it deems necessary, without prior notice.

OUTLINE DIMENSIONS - SINGLE STAGE

DIESEL ENGINE DRIVEN FIRE PUMP SETS

CNPA300-250-600L	UL LISTED	FM APPROVED

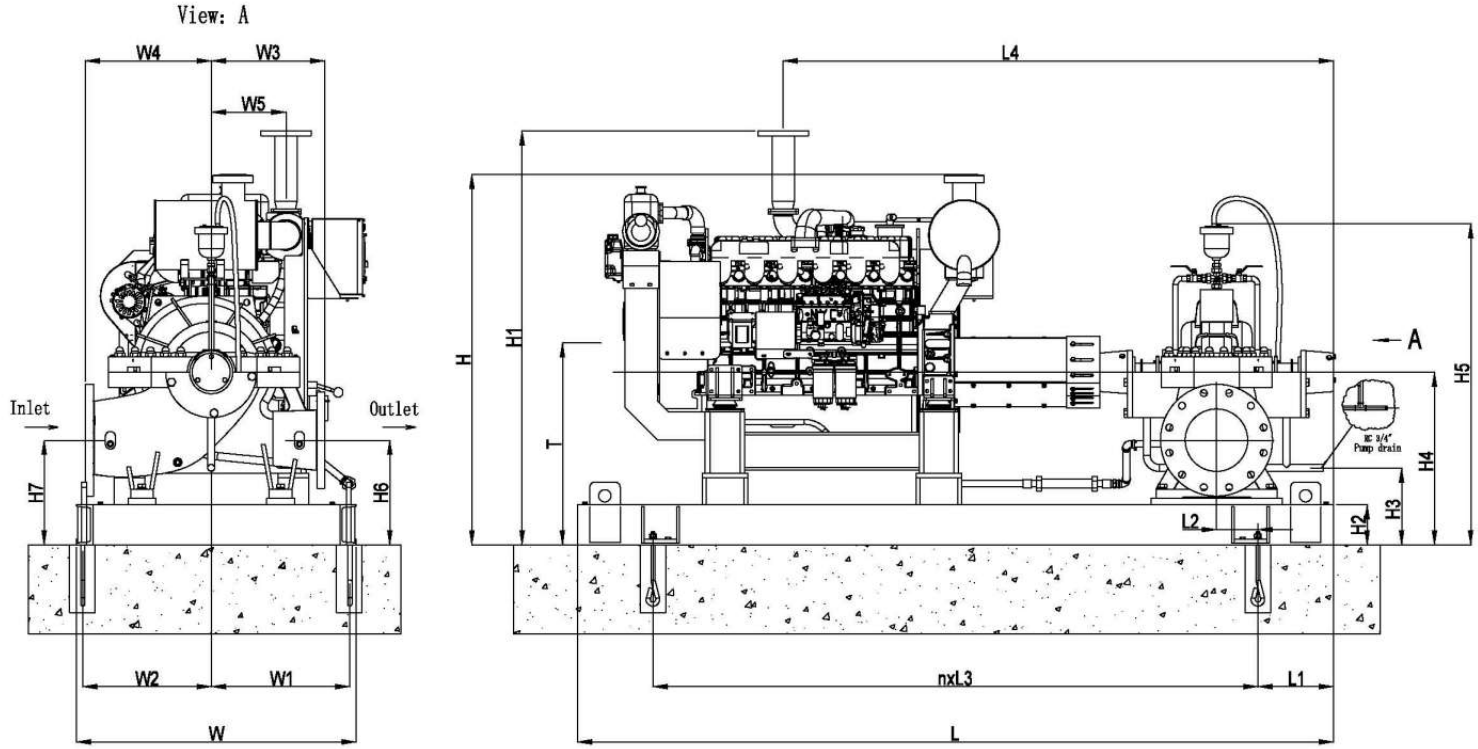

Diesel engine	Dimensions (Unit:mm)																					Anchor bolt	Anchor bolt box
	L	L1	L2	n	L3	L4	W	W1	W2	W3	W4	W5	H	H1	H2	H3	H4	H5	H6	H7	T①		
NM12-128B	3850	275	370	4	825	1870	1450	655	735	550	650	553	2213	1802	180	290	880	1594	510	510	1220	10-M20x400	10-120x120x400
NM12-128C	3850	275	370	4	825	1870	1450	655	735	550	650	553	2213	1802	180	290	880	1594	510	510	1220	10-M20x400	10-120x120x400
NM12-159	4200	275	370	4	900	3022/3166	1650	820	780	550	650	553	227/111	2055	220	330	920	1635	550	550	835	10-M30x630	10-150x150x630
NM12-159B	4200	275	370	4	900	3022/3166	1650	820	780	550	650	553	227/111	2055	220	330	920	1635	550	550	835	10-M30x630	10-150x150x630

①: Oil pump benchmark

The force and torque of the pipe

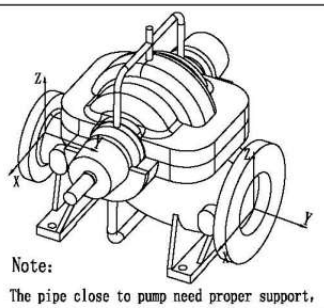

Note:

The pipe close to pump need proper support, Gravity from the inlet and outlet lines shall not be borne by the pump.

Pump Flange	Unit	Axial Direction		
		Fx	Fy	Fz
Inlet (12 INCH)	Pound	1500	1800	1200
Outlet (10 INCH)	Pound	1200	1500	1000
Inlet (DN 300)	Newton	6670	8000	5340
Outlet (DN 250)	Newton	5340	6670	4450

Pump Flange	Unit	Axial Direction		
		Mx	My	Mz
Inlet (12 INCH)	Pound-Feet	4500	2200	3400
Outlet (10 INCH)	Pound-Feet	3700	1800	2800
Inlet (DN 300)	Newton-meter	6100	2980	4610
Outlet (DN 250)	Newton-meter	5020	2440	3800

Flange specification

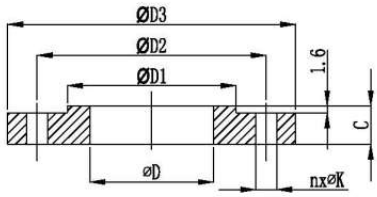

ANSI B16.1 250 Lb RF	ØD	ØD1	ØD2	ØD3	n	ØK	C
Inlet 12 INCH	304.8	417.6	450.8	520.7	16	31.7	50.8
Outlet 10 INCH	254.5	357.1	387.3	444.5	16	28.4	47.7

NOTE : ALL DIMENSIONS AND WEIGHTS ARE PRELIMINARY NOT FOR CONSTRUCTION USE. CERTIFIED AS BUILT DRAWINGS ARE AVAILABLE UPON REQUEST.

The contents of this publication must not be regarded as binding. EBARA ENGINEERING SINGAPORE PTE. LTD. reserves the right to effect any modification it deems necessary, without prior notice.

OUTLINE DIMENSIONS - SINGLE STAGE

DIESEL ENGINE DRIVEN FIRE PUMP SETS

CNPA300-250-640

UL LISTED FM APPROVED

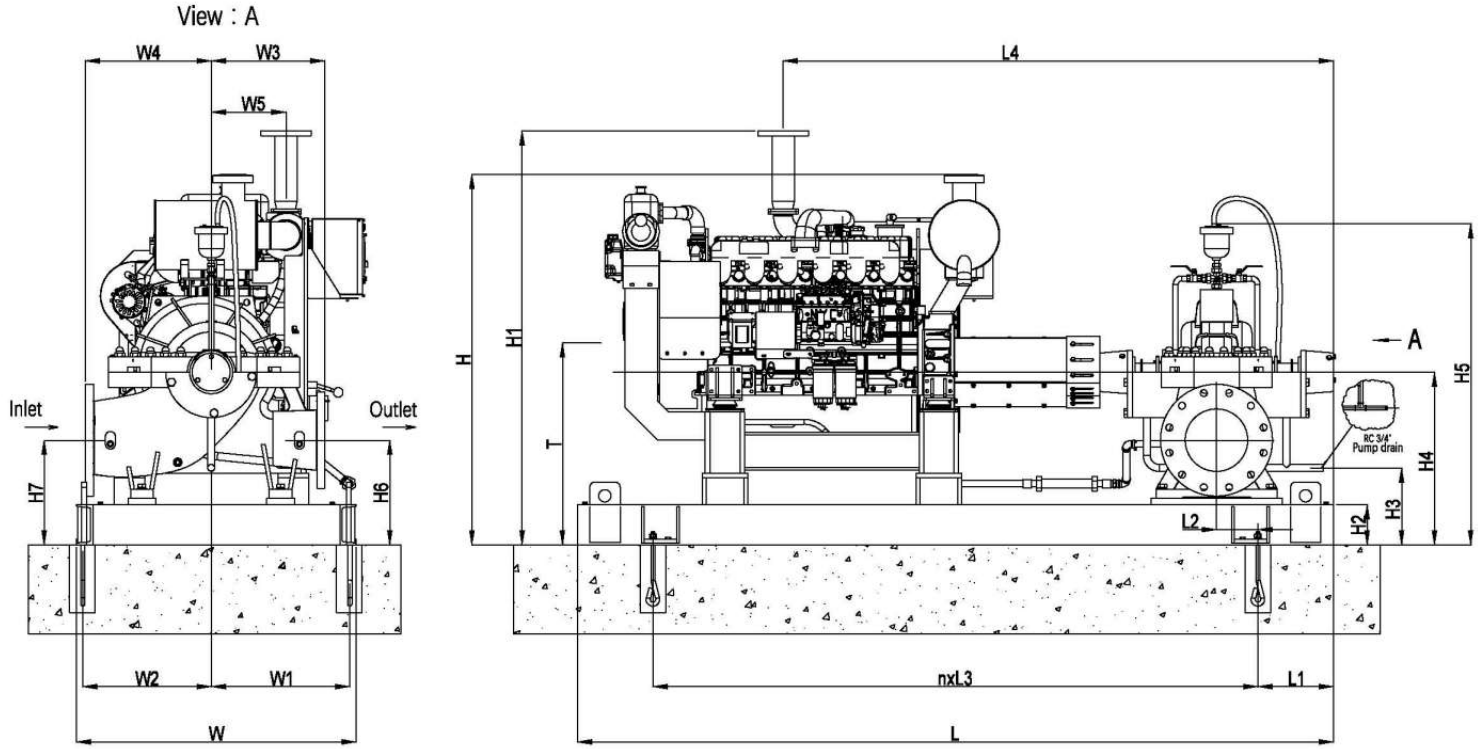

Diesel engine	Dimensions (Unit:mm)																					Anchor bolt	Anchor bolt box
	L	L1	L2	n	L3	L4	W	W1	W2	W3	W4	W5	H	H1	H2	H3	H4	H5	H6	H7	T①		
NM10-128	3700	250	400	4	800	1877	1400	650	690	570	680	540	2152	1803	180	290	880	1750	490	490	1220	10-M20x400	10-120x120x400
NM12-128	3850	275	370	4	825	2483	1450	655	735	570	680	540	2152	1803	180	290	880	1750	490	490	1220	10-M20x400	10-120x120x400
NM12-128B	3850	275	370	4	825	1870	1450	655	735	570	680	553	2213	1802	180	290	880	1750	490	490	1220	10-M20x400	10-120x120x400
NM12-128C	3850	275	370	4	825	1870	1450	655	735	570	680	553	2213	1802	180	290	880	1750	490	490	1220	10-M20x400	10-120x120x400
NM6-159B	3800	300	330	4	800	2879	1500	755	695	570	680	322	2264	2395	200	310	900	1770	510	510	1240	10-M24x500	10-150x150x500
NM12-159B	4200	300	330	4	900	2278/3479	1550	800	700	570	680	379	2594	2480	220	330	920	1790	530	530	1260	10-M30x630	10-150x150x630

①: Oil pump benchmark

The force and torque of the pipe

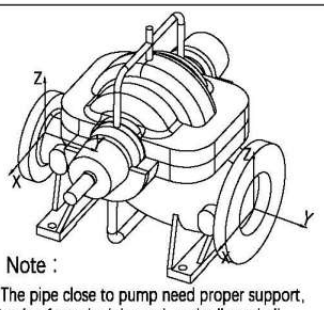

Note :

The pipe close to pump need proper support, Gravity from the inlet and outlet lines shall not be borne by the pump。

Pump Flange	Unit	Axial Direction		
		Fx	Fy	Fz
Inlet (12 INCH)	Pound	1500	1800	1200
Outlet (10 INCH)	Pound	1200	1500	1000
Inlet (DN 300)	Newton	6670	8000	5340
Outlet (DN 250)	Newton	5340	6670	4450
Pump Flange	Unit	Axial Direction		
		Mx	My	Mz
Inlet (12 INCH)	Pound-Feet	4500	2200	3400
Outlet (10 INCH)	Pound-Feet	3700	1800	2800
Inlet (DN 300)	Newton-meter	6100	2980	4610
Outlet (DN 250)	Newton-meter	5020	2440	3800

Flange specification

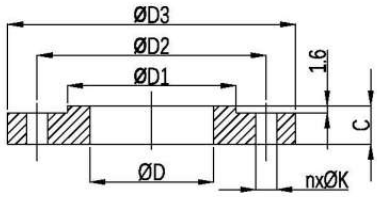

ANSI B16.1 250 Lb RF	ØD	ØD1	ØD2	ØD3	n	ØK	C
Inlet 12 INCH	304.8	417.6	450.8	520.7	16	31.7	50.8
Outlet 10 INCH	254.5	357.1	387.3	444.5	16	28.4	47.7

NOTE : ALL DIMENSIONS AND WEIGHTS ARE PRELIMINARY NOT FOR CONSTRUCTION USE. CERTIFIED AS BUILT DRAWINGS ARE AVAILABLE UPON REQUEST.

The contents of this publication must not be regarded as binding. EBARA ENGINEERING SINGAPORE PTE. LTD. reserves the right to effect any modification it deems necessary, without prior notice.

OUTLINE DIMENSIONS - SINGLE STAGE

DIESEL ENGINE DRIVEN FIRE PUMP SETS

CNPA350-250-640	UL LISTED FM APPROVED

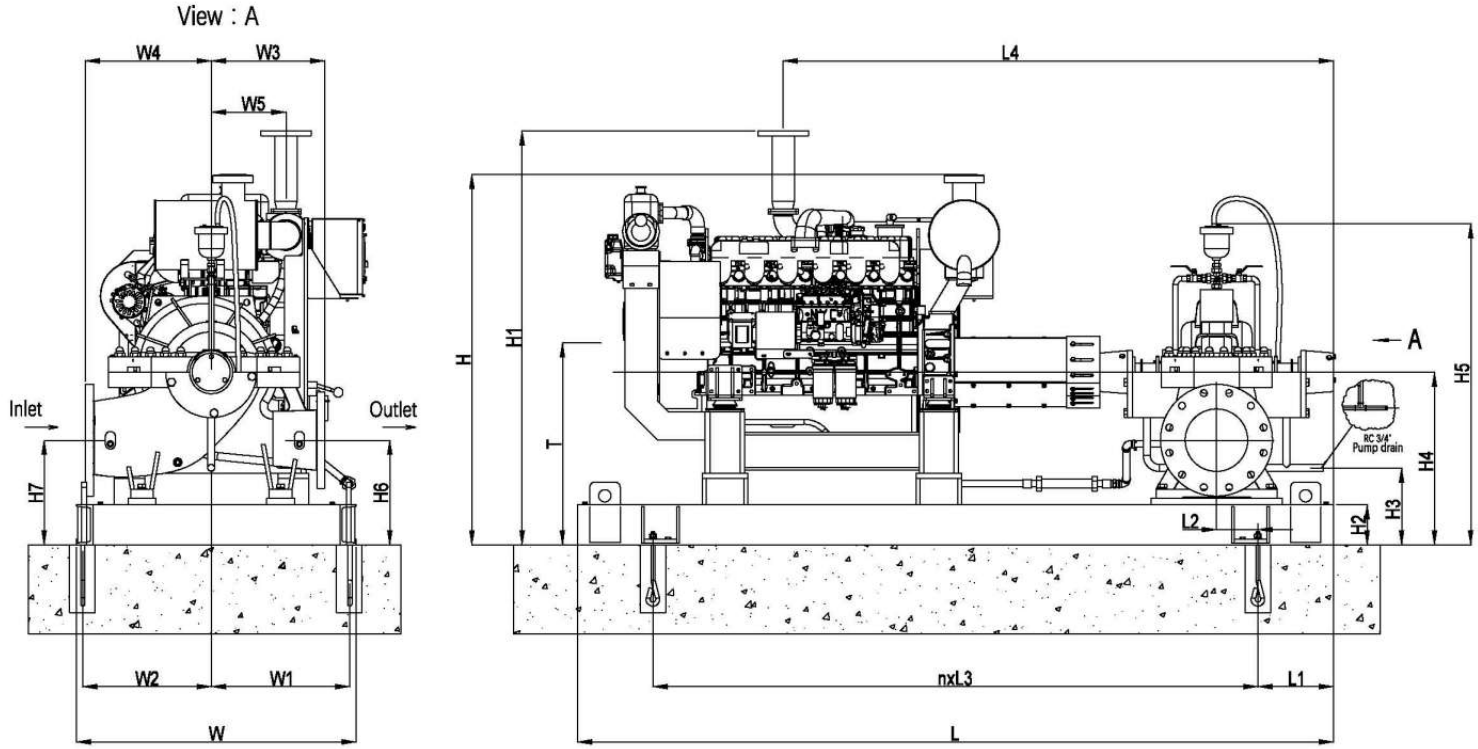

Diesel engine	Dimensions (Unit:mm)																					Anchor bolt	Anchor bolt box
	L	L1	L2	n	L3	L4	W	W1	W2	W3	W4	W5	H	H1	H2	H3	H4	H5	H6	H7	T①		
NM12-128	4000	300	405	4	850	2020	1500	655	785	600	750	540	2212	1863	200	320	940	1696	540	540	1280	10-M24x500	10-150x150x500
NM12-128B	4000	300	405	4	850	2020	1500	655	785	600	750	553	2273	1862	200	320	940	1696	540	540	1280	10-M24x500	10-150x150x500
NM12-128C	4000	300	405	4	850	2020	1500	655	785	600	750	553	2273	1862	200	320	940	1696	540	540	1280	10-M24x500	10-150x150x500
NM12-159	4400	250	450	5	780	3200	1650	810	780	600	750	227	2066	1964	220	340	960	1716	560	560	875	12-M30x630	12-150x150x630

①: Oil pump benchmark

The force and torque of the pipe

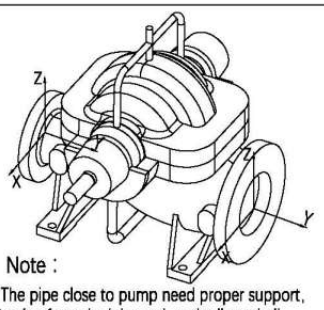

Note :

The pipe close to pump need proper support, Gravity from the inlet and outlet lines shall not be borne by the pump。

Pump Flange	Unit	Axial Direction		
		Fx	Fy	Fz
Inlet (14 INCH)	Pound	1600	2000	1300
Outlet (10 INCH)	Pound	1200	1500	1000
Inlet (DN 350)	Newton	7120	8900	5780
Outlet (DN 250)	Newton	5340	6670	4450
Pump Flange	**Unit**	**Axial Direction**		
		Mx	My	Mz
Inlet (14 INCH)	Pound-Feet	4700	2300	3500
Outlet (10 INCH)	Pound-Feet	3700	1800	2800
Inlet (DN 350)	Newton-meter	6370	3120	4750
Outlet (DN 250)	Newton-meter	5020	2440	3800

Flange specification

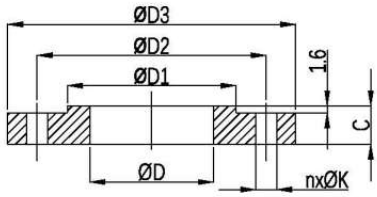

ANSI B16.1 250 Lb RF	ØD	ØD1	ØD2	ØD3	n	ØK	C
Inlet 14 INCH	355.6	481.1	514.3	584.2	20	31.7	53.8
Outlet 10 INCH	254.5	357.1	387.3	444.5	16	28.4	47.7

NOTE : ALL DIMENSIONS AND WEIGHTS ARE PRELIMINARY NOT FOR CONSTRUCTION USE. CERTIFIED AS BUILT DRAWINGS ARE AVAILABLE UPON REQUEST.

The contents of this publication must not be regarded as binding. EBARA ENGINEERING SINGAPORE PTE. LTD. reserves the right to effect any modification it deems necessary, without prior notice.

OUTLINE DIMENSIONS - SINGLE STAGE

DIESEL ENGINE DRIVEN FIRE PUMP SETS

CNPA400-350-640

UL LISTED FM APPROVED

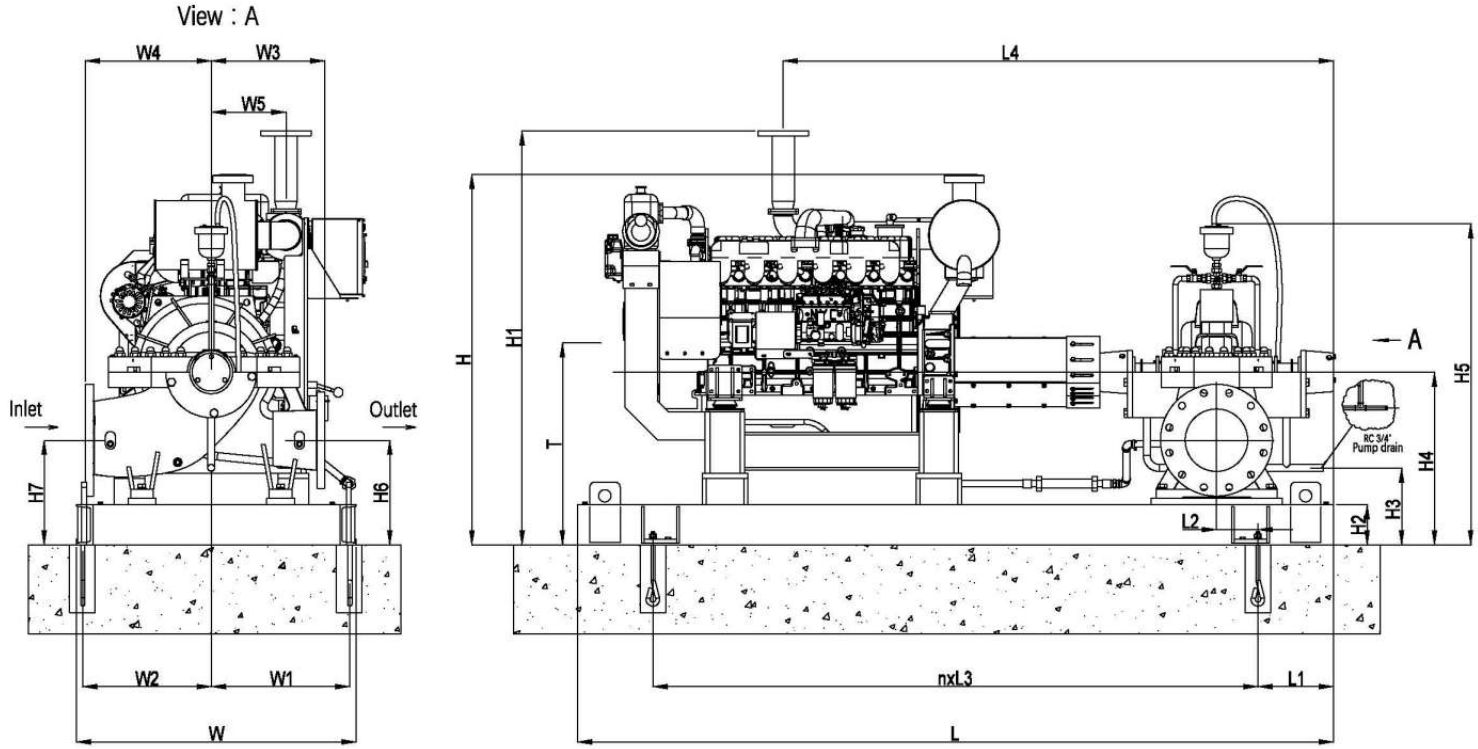

Diesel engine	Dimensions (Unit:mm)																					Anchor bolt	Anchor bolt box
	L	L1	L2	n	L3	L4	W	W1	W2	W3	W4	W5	H	H1	H2	H3	H4	H5	H6	H7	T①		
NM12-128	4000	300	400	4	850	2017	1550	745	745	650	730	540	2268	1918	180	310	995	1940	545	545	910	10-M20x400	10-120x120x400
NM12-128B	4000	300	410	4	850	2022	1450	655	735	650	730	553	2336	1927	200	330	1015	1960	565	565	930	10-M24x500	10-150x150x500
NM12-128C	4000	300	410	4	850	2022	1450	655	735	650	730	553	2336	1927	200	330	1015	1960	565	565	930	10-M24x500	10-150x150x500
NM12-159	4500	250	450	5	800	3309	1700	840	810	650	730	227	2171	2069	250	380	1065	2010	615	615	980	12-M30x630	12-150x150x630

①: Oil pump benchmark

The force and torque of the pipe

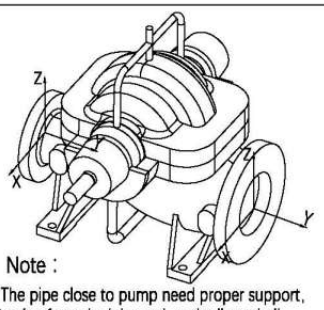

Note :

The pipe close to pump need proper support, Gravity from the inlet and outlet lines shall not be borne by the pump。

Pump Flange	Unit	Axial Direction		
		Fx	Fy	Fz
Inlet (16 INCH)	Pound	1900	2300	1500
Outlet (14 INCH)	Pound	1600	2000	1300
Inlet (DN 400)	Newton	8450	10230	6670
Outlet (DN 350)	Newton	7120	8900	5780
Pump Flange	**Unit**	**Axial Direction**		
		Mx	My	Mz
Inlet (16 INCH)	Pound-Feet	5400	2700	4000
Outlet (14 INCH)	Pound-Feet	4700	2300	3500
Inlet (DN 400)	Newton-meter	7320	3660	5420
Outlet (DN 350)	Newton-meter	6370	3120	4750

Flange specification

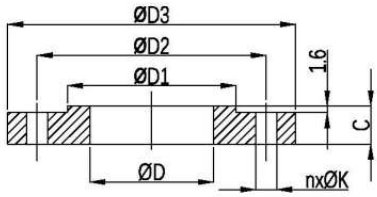

ANSI B16.1 250 Lb RF	ØD	ØD1	ØD2	ØD3	n	ØK	C
Inlet 16 INCH	406.4	548.6	571.5	647.7	20	35.1	57.1
Outlet 14 INCH	355.6	481.1	514.3	584.2	20	31.7	53.8

NOTE : ALL DIMENSIONS AND WEIGHTS ARE PRELIMINARY NOT FOR CONSTRUCTION USE. CERTIFIED AS BUILT DRAWINGS ARE AVAILABLE UPON REQUEST.

The contents of this publication must not be regarded as binding. EBARA ENGINEERING SINGAPORE PTE. LTD. reserves the right to effect any modification it deems necessary, without prior notice.

OUTLINE DIMENSIONS - MULTI STAGE

ELECTRIC MOTOR DRIVEN FIRE PUMP SETS

CNPA125-100-330X2 | UL LISTED | FM APPROVED

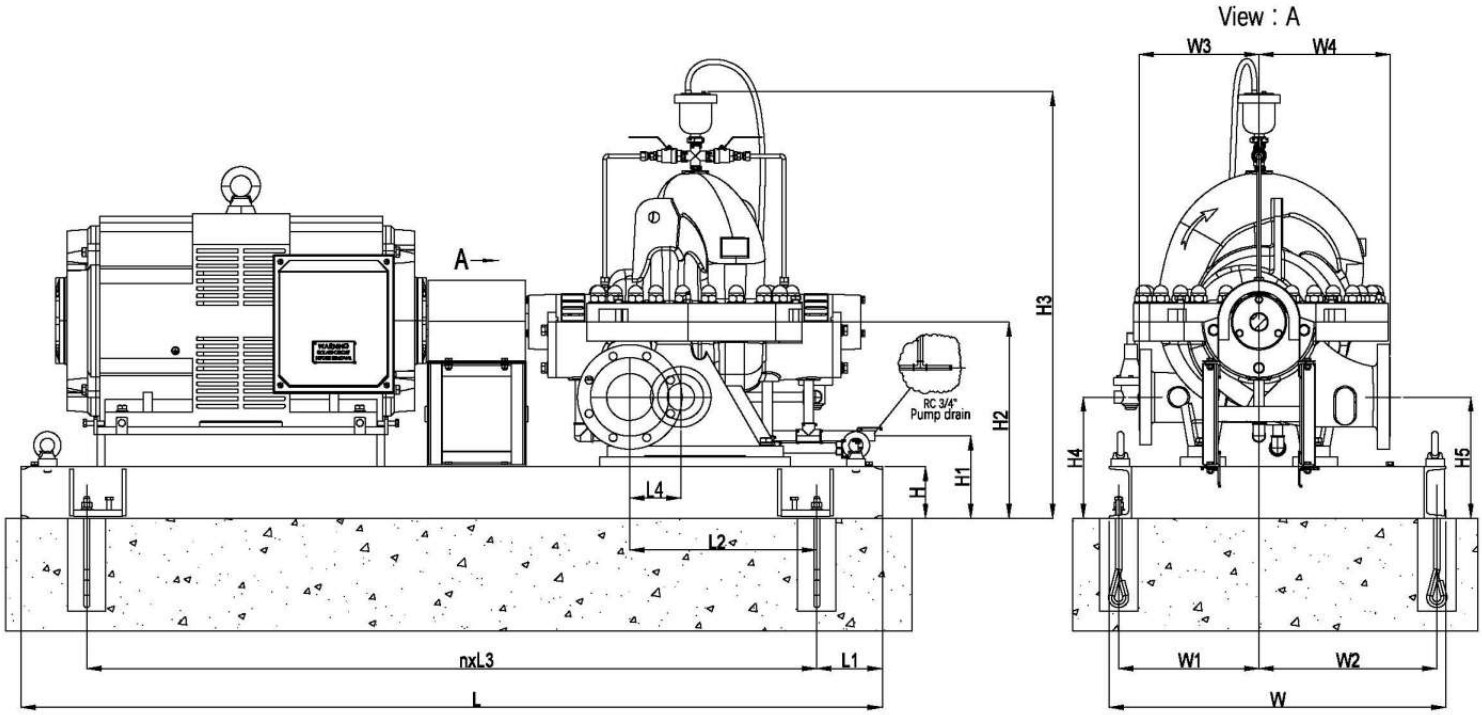

Motor model	Dimensions (Unit:mm)																	Anchor bolt	Anchor bolt box
	L	L1	L2	n	L3	L4	W	W1	W2	W3	W4	H	H1	H2	H3	H4	H5		
F-TDC444TS200U2B	2150	175	500	3	600	185	900	375	475	320	350	140	210	525	1185	325	325	8-M16x300	8-120x120x300
F-TXC447TS200U2B	2400	150	525	3	700	185	900	375	475	320	350	140	210	525	1185	325	325	8-M16x300	8-120x120x300
F-TDC449TS250U2B	2350	170	505	3	670	185	900	375	475	320	350	140	210	525	1185	325	325	8-M16x300	8-120x120x300
F-TXC449TS250U2B	2400	150	525	3	700	185	900	375	475	320	350	140	210	525	1185	325	325	8-M16x300	8-120x120x300
F-TDC447TS300U2B	2350	170	505	3	670	185	900	375	475	320	350	140	210	525	1185	325	325	8-M16x300	8-120x120x300
F-TXC449TS300U2B	2400	150	525	3	700	185	900	375	475	320	350	140	210	525	1185	325	325	8-M16x300	8-120x120x300
F-TDC449TS350U2B	2350	170	505	3	670	185	900	375	475	320	350	140	210	525	1185	325	325	8-M16x300	8-120x120x300
F-TXC586/7TS350U2B	2750	280	395	3	730	185	1200	475	675	320	350	160	230	545	1205	345	345	8-M20x400	8-120x120x400
F-TXC586/7TS400U2B	2750	280	395	3	730	185	1200	475	675	320	350	160	230	545	1205	345	345	8-M20x400	8-120x120x400

The force and torque of the pipe

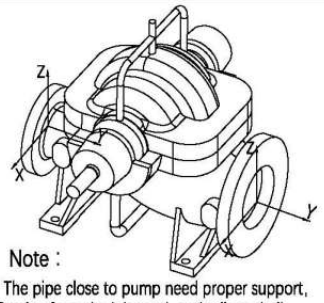

Note :
The pipe close to pump need proper support, Gravity from the inlet and outlet lines shall not be borne by the pump。

Pump Flange	Unit	Axial Direction		
		Fx	Fy	Fz
Inlet (5 INCH)	Pound	560	700	460
Outlet (4 INCH)	Pound	320	400	260
Inlet (DN 125)	Newton	2490	3110	2050
Outlet (DN 100)	Newton	1420	1780	1160
Pump Flange	**Unit**	**Axial Direction**		
		Mx	My	Mz
Inlet (5 INCH)	Pound-Feet	1700	870	1300
Outlet (4 INCH)	Pound-Feet	980	500	740
Inlet (DN 125)	Newton-meter	2300	1180	1760
Outlet (DN 100)	Newton-meter	1330	680	1000

Flange specification

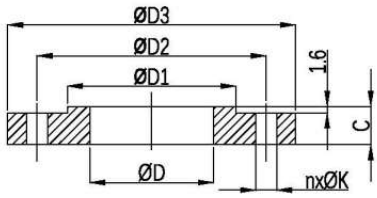

ANSI B16.1 250 Lb RF	ØD	ØD1	ØD2	ØD3	n	ØK	C
Inlet 5 INCH	128.3	211.0	234.9	279.4	8	22.3	35.0
Outlet 4 INCH	102.4	176.3	200.1	254.0	8	22.3	31.7

NOTE : ALL DIMENSIONS AND WEIGHTS ARE PRELIMINARY NOT FOR CONSTRUCTION USE. CERTIFIED AS BUILT DRAWINGS ARE AVAILABLE UPON REQUEST.

The contents of this publication must not be regarded as binding. EBARA ENGINEERING SINGAPORE PTE. LTD. reserves the right to effect any modification it deems necessary, without prior notice.

OUTLINE DIMENSIONS - MULTI STAGE

ELECTRIC MOTOR DRIVEN FIRE PUMP SETS

CNPA200-150-450X2 | UL LISTED | FM APPROVED

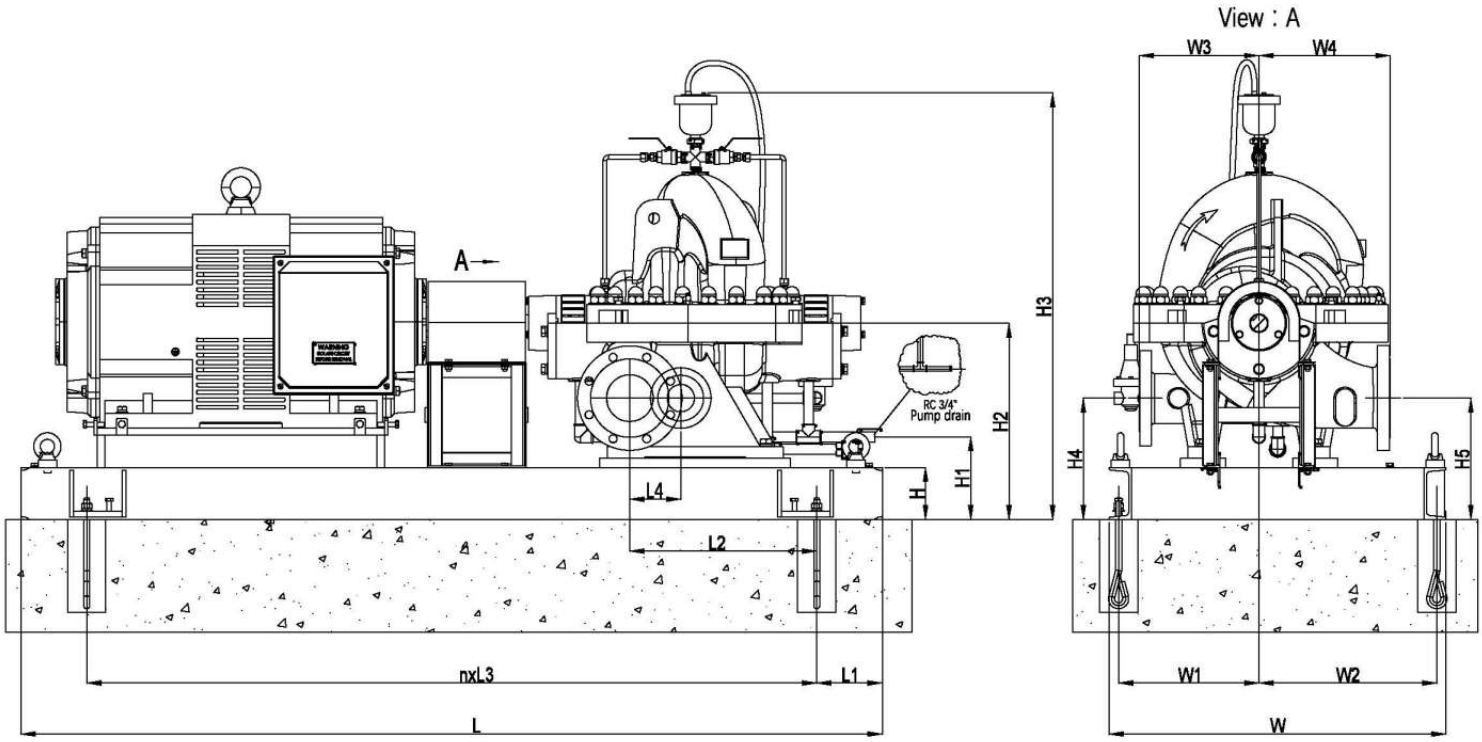

Motor model	Dimensions (Unit:mm)																	Anchor bolt	Anchor bolt box
	L	L1	L2	n	L3	L4	W	W1	W2	W3	W4	H	H1	H2	H3	H4	H5		
F-TDC447T250U4B	2700	300	555	3	700	230	1100	525	525	500	500	160	230	685	1468	385	405	8-M20x400	8-120x120x400
F-TDC449T350U4B	2700	300	555	3	700	230	1100	525	525	500	500	160	230	685	1468	385	405	8-M20x400	8-120x120x400
F-TXC449T250U4B	2800	275	580	3	750	230	1100	520	520	500	500	180	250	705	1488	405	425	8-M20x400	8-120x120x400
F-TXC449T300U4B	2800	275	580	3	750	230	1100	520	520	500	500	180	250	705	1488	405	425	8-M20x400	8-120x120x400
F-TXC586/7T400U4B	3100	305	550	3	830	230	1300	620	620	500	500	180	250	705	1488	405	425	8-M20x400	8-120x120x400

The force and torque of the pipe

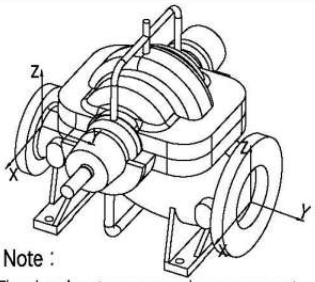

Note :
The pipe close to pump need proper support, Gravity from the inlet and outlet lines shall not be borne by the pump。

Pump Flange	Unit	Axial Direction		
		Fx	Fy	Fz
Inlet (8 INCH)	Pound	850	1100	700
Outlet (6 INCH)	Pound	560	700	460
Inlet (DN 200)	Newton	3780	4890	3110
Outlet (DN 150)	Newton	2490	3110	2050
Pump Flange	**Unit**	**Axial Direction**		
		Mx	My	Mz
Inlet (8 INCH)	Pound-Feet	2600	1300	1900
Outlet (6 INCH)	Pound-Feet	1700	870	1300
Inlet (DN 200)	Newton-meter	3530	1760	2580
Outlet (DN 150)	Newton-meter	2300	1180	1760

Flange specification

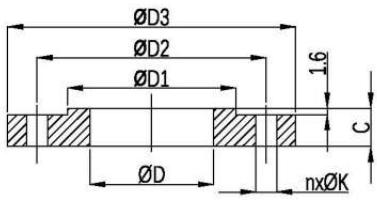

ANSI B16.1 250 Lb RF	ØD	ØD1	ØD2	ØD3	n	ØK	C
Inlet 8 INCH	203.2	303.2	330.2	381.0	12	25.4	41.1
Outlet 6 INCH	154.2	246.1	269.7	317.5	12	22.3	36.5

NOTE : ALL DIMENSIONS AND WEIGHTS ARE PRELIMINARY NOT FOR CONSTRUCTION USE. CERTIFIED AS BUILT DRAWINGS ARE AVAILABLE UPON REQUEST.

The contents of this publication must not be regarded as binding. EBARA ENGINEERING SINGAPORE PTE. LTD. reserves the right to effect any modification it deems necessary, without prior notice.

OUTLINE DIMENSIONS - MULTI STAGE

DIESEL ENGINE DRIVEN FIRE PUMP SETS

CNPA125-100-330X2 | UL LISTED | FM APPROVED

View: A

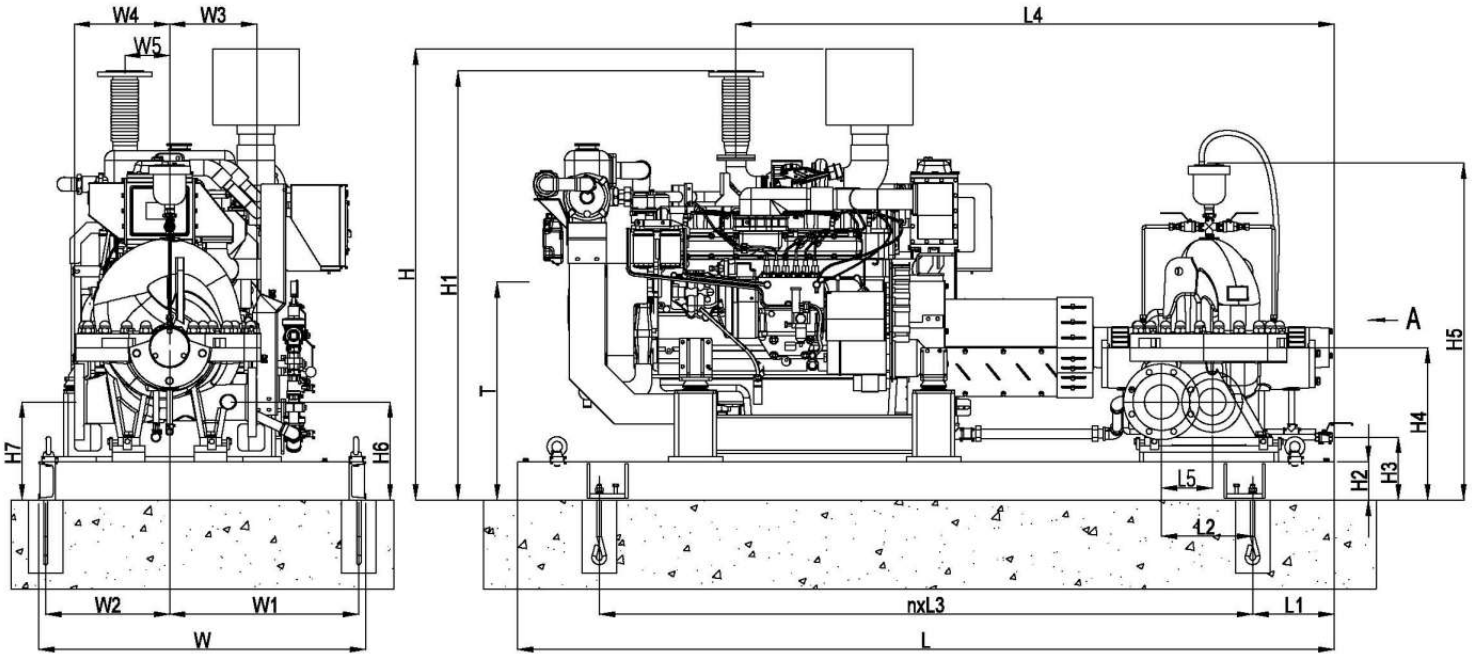

Diesel engine	Dimensions (Unit:mm)																						Anchor bolt	Anchor bolt box
	L	L1	L2	n	L3	L4	L5	W	W1	W2	W3	W4	W5	H	H1	H2	H3	H4	H5	H6	H7	T①		
NM6-110E	3000	300	355	3	800	2220	185	1200	695	455	320	355	318	1658	1577	140	245	560	1220	360	360	666	8-M16x300	8-120x120x300
NM6-110D	3000	300	355	3	800	2220	185	1200	695	455	320	355	318	1658	1577	140	245	560	1220	360	360	666	8-M16x300	8-120x120x300
NM6-108E	3000	300	375	3	800	2158	185	1100	575	475	320	355	330	1494	1625	140	245	560	1220	360	360	725	8-M16x300	8-120x120x300

①: Oil pump benchmark

The force and torque of the pipe

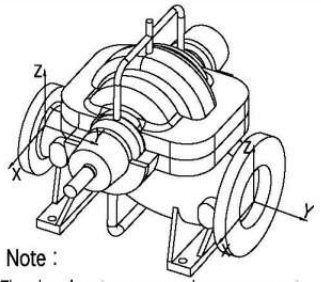

Note :

The pipe close to pump need proper support, Gravity from the inlet and outlet lines shall not be borne by the pump。

Pump Flange	Unit	Axial Direction		
		Fx	Fy	Fz
Inlet (5 INCH)	Pound	560	700	460
Outlet (4 INCH)	Pound	320	400	260
Inlet (DN 125)	Newton	2490	3110	2050
Outlet (DN 100)	Newton	1420	1780	1160
Pump Flange	Unit	Axial Direction		
		Mx	My	Mz
Inlet (5 INCH)	Pound-Feet	1700	870	1300
Outlet (4 INCH)	Pound-Feet	980	500	740
Inlet (DN 125)	Newton-meter	2300	1180	1760
Outlet (DN 100)	Newton-meter	1330	680	1000

Flange specification

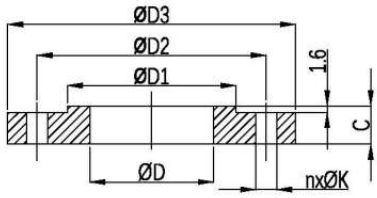

ANSI B16.1 250 Lb RF	ØD	ØD1	ØD2	ØD3	n	ØK	C
Inlet 5 INCH	128.3	211.0	234.9	279.4	8	22.3	35.0
Outlet 4 INCH	102.4	176.3	200.1	254.0	8	22.3	31.7

NOTE : ALL DIMENSIONS AND WEIGHTS ARE PRELIMINARY NOT FOR CONSTRUCTION USE. CERTIFIED AS BUILT DRAWINGS ARE AVAILABLE UPON REQUEST.

The contents of this publication must not be regarded as binding. EBARA ENGINEERING SINGAPORE PTE. LTD. reserves the right to effect any modification it deems necessary, without prior notice.

OUTLINE DIMENSIONS - MULTI STAGE

DIESEL ENGINE DRIVEN FIRE PUMP SETS

CNPA200-150-450X2 | UL LISTED | FM APPROVED

View: A

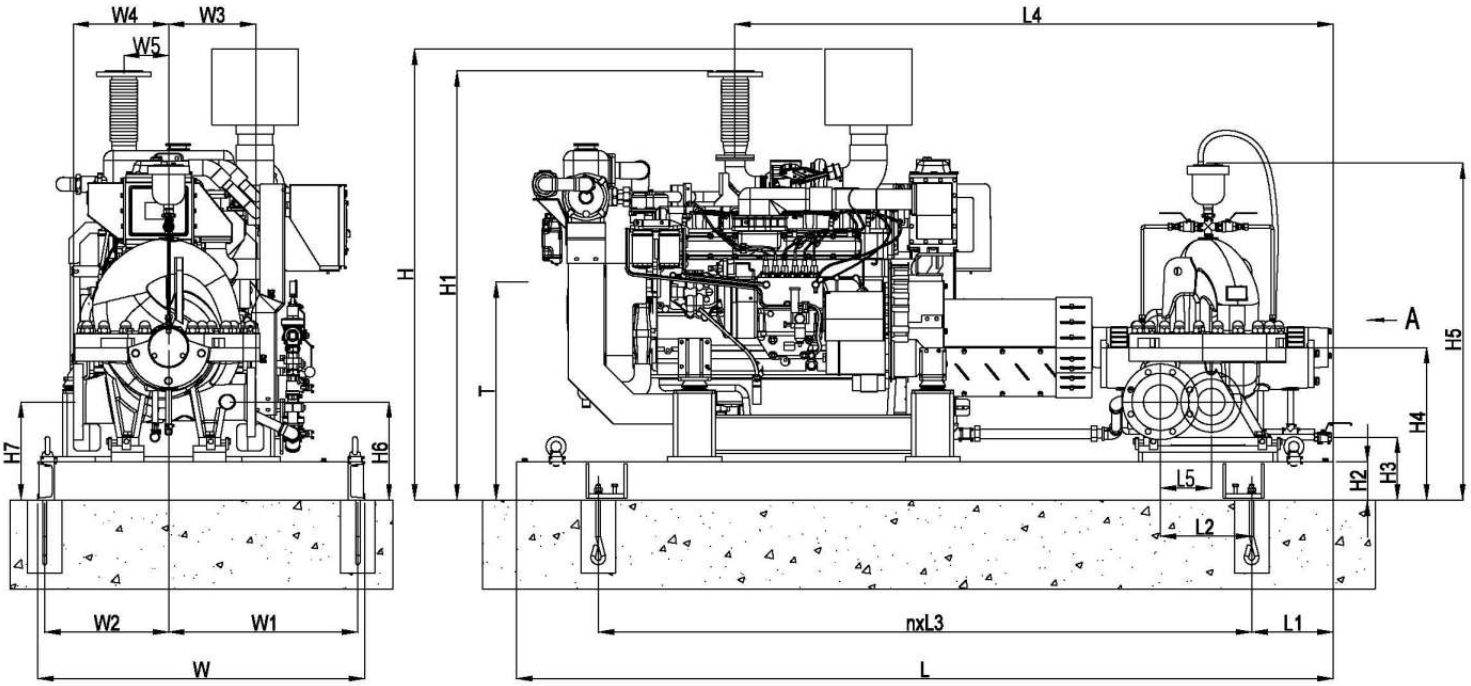

Diesel engine	Dimensions (Unit:mm)																						Anchor bolt	Anchor bolt box
	L	L1	L2	n	L3	L4	L5	W	W1	W2	W3	W4	W5	H	H1	H2	H3	H4	H5	H6	H7	T①		
NM6-114B	3200	300	495	4	650	2370	230	1300	700	550	500	500	300	1900	1710	160	245	700	1550	400	420	1011	10-M20x400	10-120x120x400
NM6-135B	3500	250	545	4	750	2681	230	1250	675	525	500	500	372	1763	1779	160	245	700	1550	400	420	890	10-M20x400	10-120x120x400
NM6-135	3500	250	545	4	750	2681	230	1250	675	525	500	500	372	1763	1779	160	245	700	1550	400	420	890	10-M20x400	10-120x120x400
NM6-128B	3400	300	495	4	700	2518	230	1300	700	550	500	500	340	1665	1660	160	245	700	1550	400	420	962	10-M20x400	10-120x120x400
NM6-128	3400	300	495	4	700	2518	230	1100	550	500	500	500	340	1865	1660	160	245	700	1550	400	420	962	10-M20x400	10-120x120x400

①: Oil pump benchmark

The force and torque of the pipe

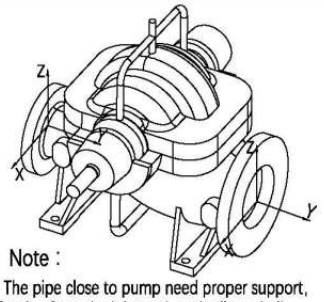

Note :

The pipe close to pump need proper support, Gravity from the inlet and outlet lines shall not be borne by the pump。

Pump Flange	Unit	Axial Direction		
		Fx	Fy	Fz
Inlet (8 INCH)	Pound	850	1100	700
Outlet (6 INCH)	Pound	560	700	460
Inlet (DN 200)	Newton	3780	4890	3110
Outlet (DN 150)	Newton	2490	3110	2050
Pump Flange	Unit	Axial Direction		
		Mx	My	Mz
Inlet (8 INCH)	Pound-Feet	2600	1300	1900
Outlet (6 INCH)	Pound-Feet	1700	870	1300
Inlet (DN 200)	Newton-meter	3530	1760	2580
Outlet (DN 150)	Newton-meter	2300	1180	1760

Flange specification

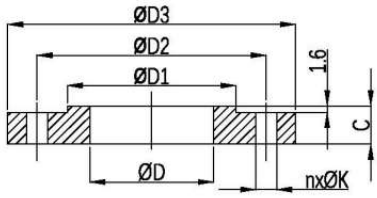

ANSI B16.1 250 Lb RF	ØD	ØD1	ØD2	ØD3	n	ØK	C
Inlet 8 INCH	203.2	303.2	330.2	381.0	12	25.4	41.1
Outlet 6 INCH	154.2	246.1	269.7	317.5	12	22.3	36.5

NOTE : ALL DIMENSIONS AND WEIGHTS ARE PRELIMINARY NOT FOR CONSTRUCTION USE. CERTIFIED AS BUILT DRAWINGS ARE AVAILABLE UPON REQUEST.

The contents of this publication must not be regarded as binding. EBARA ENGINEERING SINGAPORE PTE. LTD. reserves the right to effect any modification it deems necessary, without prior notice.

FIRE PUMP DRIVER - ELECTRIC MOTORS

UL LISTED ODP / TEFC ELECTRIC MOTORS

F-TDC / F-TXC SERIES

These Fire Pump Duty (ODP / TEFC) motors are designed for environments where dirt and moisture are minimal and provide maximum ventilation and heat dissipation. Design B torque and high efficiency was designed to meet the market requirements of optimized and rugged motors, complying with international standard dimensions, safety and performance requirements.

Standard Features

- Open Drip Proof (ODP) / Total Enclosed Fan Cooled(TEFC)
- Frame sizes: ODP-254T through 449TS NEMA Frames
  TEFC-143T through 449TS NEMA Frames
- Number of poles: 2, 4 or 6
- Voltage: 380/400/415V 50Hz
  208-230/460V 60Hz or 575V 60Hz
- NEMA Dimensions
- NEMA design 'B' ratings
- Service Factor: 1.15
- Class F insulation for all frames, Class B rise
- Continuous Duty (S1)
- 50°C ambient temperature
- Motors are supplied with ball bearings as standard.

Certifications

UL 1004-1, Rotating Electrical Machines - General Requirements
UL 1004-5, Fire Pump Motors

The contents of this publication must not be regarded as binding. EBARA ENGINEERING SINGAPORE PTE. LTD. reserves the right to effect any modification it deems necessary, without prior notice.

FIRE PUMP DRIVER - DIESEL ENGINES

UL LISTED / FM APPROVED DIESEL ENGINES

UL Listed / FM Approved Diesel engine–driven fire pumps are often used where there is insufficient or unreliable electrical power for an electric motor–driven fire pump.
They are used in conjunction with, or in addition to, electric motor–driven fire pumps as the best combination for reliable pumping systems.

Certifications

UL 1247, Diesel Engines for Driving Stationary Fire Pumps
FM Approvals Class: 1333, Diesel Engines for Fire Pump Drivers

EQUIPMENT	STANDARD	OPTIONAL
Air Cleaner	DIESEL ENGINE SPECIFICATION SHEET TO BE PROVIDED AS PER SELECTED ENGINE MODEL	DIESEL ENGINE SPECIFICATION SHEET TO BE PROVIDED AS PER SELECTED ENGINE MODEL
Alarm		
Alternator		
Coupling		
Crankcase Ventilation		
Engine Heater		
Exhaust Flex Connection		
Exhaust Protection		
Flywheel Housing		
Flywheel Power Take Off		
Fuel Connections		
Fuel Filter		
Fuel Injection System		
Governor, Speed		
Heat Exchanger		
Instrument Panel		
Junction Box		
Lube Oil Cooler		
Lube Oil Filter		
Lube Oil Pump		
Manual Start Control		
Overspeed Control		
Raw Water Cooling Loop w/ Alarms		
Raw Water Solenoid Operation		
Run - Stop Control		
Starters		
Throttle Control		
Water Pump		

The contents of this publication must not be regarded as binding. EBARA ENGINEERING SINGAPORE PTE. LTD. reserves the right to effect any modification it deems necessary, without prior notice.

Pressure Maintenance(Jockey / Make-Up) Pump

Factors such as the nature of the water supply or leakage through the system piping can cause pressure drops or fluctuations within the fire protection system. These pressure fluctuations can cause the fire pump to operate even though the fire protection system has not been activated — that is, a sprinkler did not activate, or a standpipe valve was not opened.

Fire pumps are not intended to operate for short durations to maintain system pressure and the use of fire pumps as pressure maintenance devices is prohibits.

Most piping systems generally have a small amount of leakage causing drop of system pressure. To prevent the fire pump from starting to maintain the system pressure for this non-fire related need, a small jockey pump controller is pressure activated and the pump sized to maintain the system pressure at the minimum allowable leakage rate.

Pumps meeting these requirements is acceptable for use as jockey pump.

Pressure maintenance pumps shall not be required to be listed.
Pressure maintenance pumps shall be approved.

EVMSG - vertical multistage centrifugal pumps.

Fire Pumps Operation Sequence

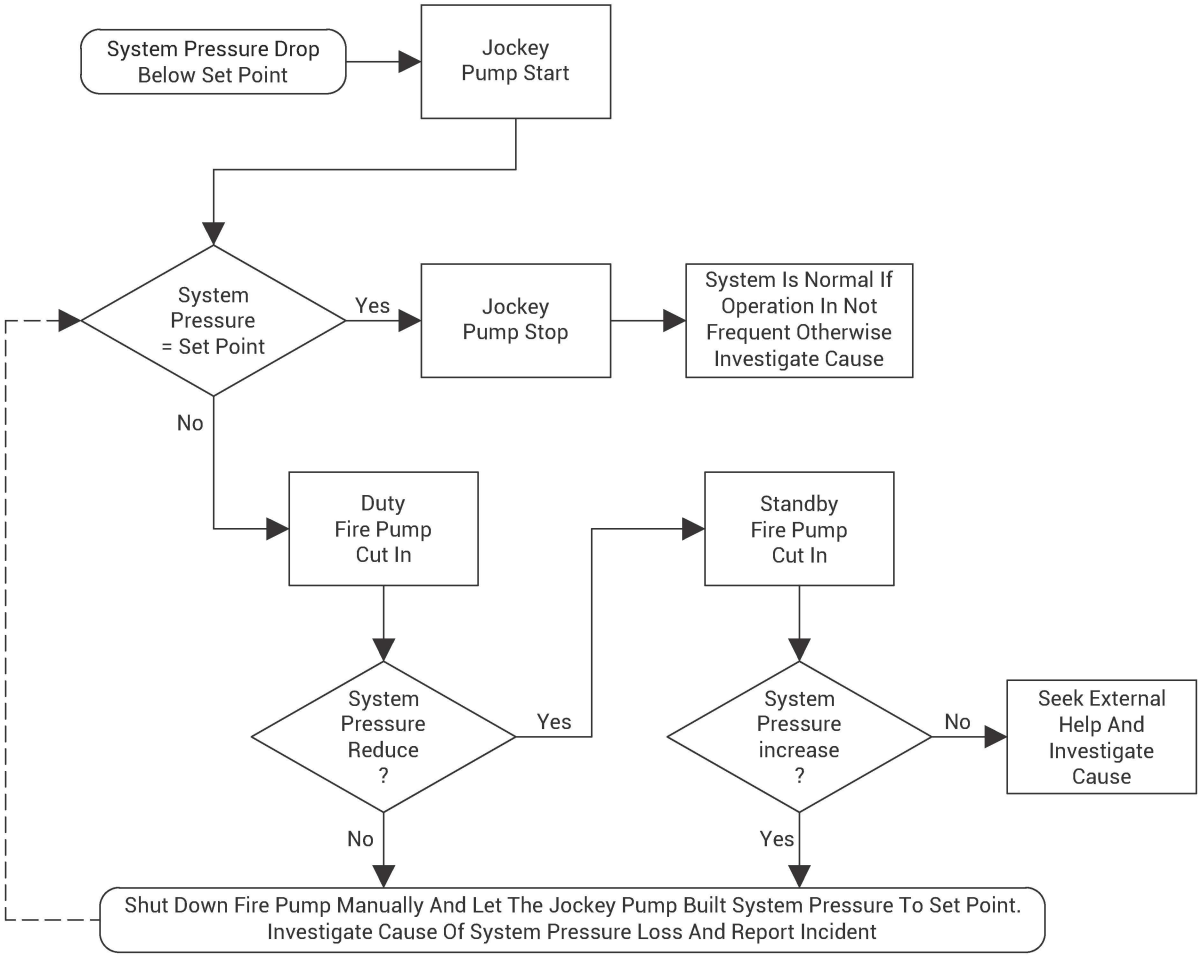

The contents of this publication must not be regarded as binding. EBARA ENGINEERING SINGAPORE PTE. LTD. reserves the right to effect any modification it deems necessary, without prior notice.

FIRE PUMP CONTROLLERS

Electric motors and diesel unit are furnished with a manual or combined manual and automatic controller. Upon a manual or automatic signal, a controller will engage the pump driver, and monitor all key functions.
Most controllers are furnished for automatic operation, and initiate starting by sensing a pressure drops in the system by way of a sensing line.
All controllers are available with a wide variety of options to suit individual job needs.

DIESEL ENGINE DRIVEN FIRE PUMP CONTROLLERS

Combined automatic and manual based diesel engine fire pump controllers are intended for starting and monitoring fire pump diesel engines. They are available for use with 12 or 24 volt negative ground systems using lead acid or nickel-cadmium batteries. The controller monitors, displays and records fire pump system information.

UL Listed / FM Approved Diesel Engine Driven Fire Pump Controller

ELECTRIC MOTOR DRIVEN FIRE PUMP CONTROLLERS

Fire Pump Controllers are assembled, wired and tested as a unit. The controllers are UL Listed and FM Approved. They completely conform to the latest edition of NFPA-20, Standard for the Installation of Centrifugal Fire Pumps and NFPA-70, National Electrical Code.
The most two used starting methods are (Across the line & Wye-Delta). Soft start starting method and Automatic transfer switch controller is also available on request (Please contact our technical department).

UL Listed / FM Approved Electric Motor Driven Fire Pump Controller

JOCKEY PUMP CONTROLLERS

Jockey Pump Controllers are intended for use with fire pump systems. They are used for pressure maintenance in fire pump installations to prevent unnecessary cycling of the main fire pump. The most two used starting methods are (Across the line & Wye-Delta) (Please contact our technical department).

UL508A Jockey Pump Controller

The contents of this publication must not be regarded as binding. EBARA ENGINEERING SINGAPORE PTE. LTD. reserves the right to effect any modification it deems necessary, without prior notice.

ACCESSOORIES AND CONFIGURATIONS

LEGEND OF ACCESSORIES

ELBOW	SUCTION GAUGE	CHECK VALVE	DRIP BALL VALVE	ELECTRIC CONNETION
OS&Y GATE VALVE	DISCHARGE GAUGE	TEE	HOSE VALVE, CAP & CHAIN	SENSING LINE
ECCENTRIC REDUCER	CASING RELIEF VALVE	MAIN RELIEF VALVE	GATE VALVE	PIPES
AUTOMATIC AIR RELEASE VALVE	CONCENTRIC REDUCER	ENCLOSE CONE	FLOW METER	RAW WATER COOLING LINE

NOTE:
- THIS CONFIGURATION ARRANGEMENT DRAWING IS FOR VISUAL AND INFORMATION PURPOSE ONLY!
- ACCESSORIES IS ONLY FOR REFERENCE, MAY NOT INCLUDE IN THE SCOPE OF SUPPLY.

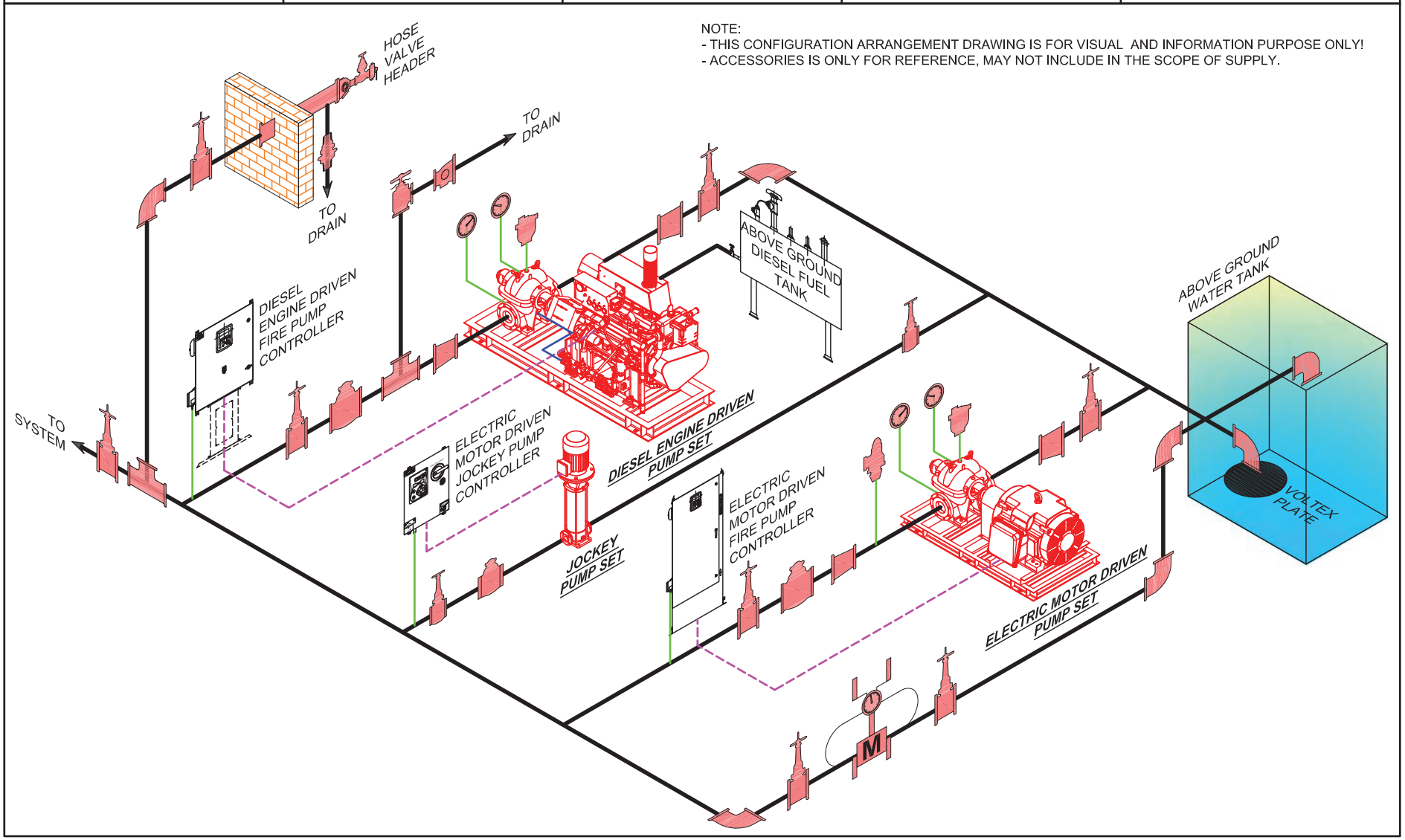

Your Life, our Quality. Worldwide.

Looking ahead, going beyond expectations
Ahead Beyond

The contents of this publication must not be regarded as binding. EBARA ENGINEERING SINGAPORE PTE. LTD. reserves the right to effect any modification it deems necessary, without prior notice.

ACCESSOORIES

1. **Gauges:** A suction gauge and discharge gauge are furnished for each. Fire Pump with a minimum dial size of 3½ inch. The pressure range shall be twice the working pressure of the pump with a minimum of 200 Psi.

2. **Automatic Air Release Valve:** The automatic air release calve releases air that may accumulate in the volute of horizontal split case pumps. The valve is not required in the self-venting end suction pumps. The minimum size is ½ inch inlet and the valve is installed at the top of the volute.

3. **Casing Relief Valve**: The casing relief valve provides a vital function on electric driven units. When set properly, the valve permits enough water to discharge to a drain to prevent the pump from over-heating when operating at conditions near shutoff. The valve will have an adjustable range which is set in the field. Engine driven units do not require a casing relief valve for which water is continuously drawn though the pump for engine heat exchanger cooling purposes.

4. **Pressure Sensing Lines:** The sensing lines can be bronze, copper, or stainless steel pipe.

5. **Flow Meter System:** In place of, or, in addition to the hose valve header with hose valves, EESP offers a complete line of FM-Approved Flow Meters. The flow meters can adequately test the fire pump performance in case of limited water supply.

6. **Eccentric Suction Reducer:** The suction piping is sized such that the NPSH available will be greater than 19ft. absolute, when operating at 150% of the rated capacity, but not less than the minimum values given by NFPA 20. The piping size may be different than the pump suction size necessitating the need for an eccentric reducer. An eccentric fitting is used to prevent the possibility of air pockets forming in the line as would be experienced if a concentric fitting were used.

7. **Concentric Suction Reducer:** The discharge pipe size shall not be less than the values given by NFPA. These values are generally different than pump discharge size and hence the need for an increasing or reducing fitting.

8. **Main Relief Valve:** Pumps which are connected to diesel engine or steam turbine drivers, shall be equipped with a listed main relief valve. The main relief valve size shall be greater than or equal to the values given in NFPA 20. The valves are set to prevent a pressure on the fire protection system greater than it can withstand. Spring loaded and pilot operated types are available in UL/FM Designs. The main relief valves are also used when the shutoff pressure plus the static suction pressure exceeds the rated system pressure.

9. **Enclosed Waste Cone:** The enclosed or open waste cone is connected directly to the main relief valve and provides a visual indication of the water discharging through the line. The fitting also increases the line size from the relief valve as required by NFPA 20. The enclosed cone is provided with a sight glass.

10. **Diesel Engine Accessories:**

a. **Fuel Tank:** Fuel tanks for diesel are sized to equal or exceed the engine rated HP value. As an example, a 115 HP diesel engine would be furnished with a 115 gallon or larger fuel tank.

b. **Fuel System:** A standard fuel system contains a lockable fill cap, fuel strainer, fuel gauge, vent cap, supply line valve, flexible connectors for fuel supply and return, and other miscellaneous fittings. All the connecting piping is generally furnished by the installing contractor.

c. **Cooling Water Line:** NFPA 20 – requires engine for Fire Pump services to be cooled by a water-cooled heat exchanger, other standards accept cooling using radiator system.

d. **Batteries:** Diesel engines for Fire Pump service are furnished with a back-up battery system. Two sets of heavy duty diesel starting batteries are furnished with capacities to crank the engine through a NFPA 20 cranking cycle.
Battery cables are furnished to allow placement of the batteries immediately adjacent to the engine.

e. **Flexible Exhaust connectors**: A flexible connector is provided at the exhaust outlet of the engine. The connector relieves thermal expansion strains and helps dampen transmitted engine vibrations.

f. **Exhaust Silencer:** An industrial exhaust silencer providing 10-15 DBA. reduction is furnished with each diesel unit. Other grades are available to suite individual job requirements.

11. **Hose Valves:** Hose valves are UL/FM approved and are furnished in the required quantity for a given Fire Pump size by NFPA 20. The threads will be generally according to NPT Standard with caps and chains.

NFPA Minimum Piping Sizes (Nominal) In Inches

Pump Rating (gpm)	Suction	Discharge	Relief Valve	Relief Valve Discharge	Meter Device	Number and Size of		Hose Header Supply
						Hose Valves	Nonthreaded Connections	
300	4	4	2½	3½	3½	1 — 2 ½	1 — 2 ½	3
400	4	4	3	5	4	2 — 2 ½	1 — 5	4
450	5	5	3	5	4	2 — 2 ½	1 — 5	4
500	5	5	3	5	5	2 — 2 ½	1 — 5	4
750	6	6	4	6	5	3 — 2 ½	1 — 5	6
1000	8	6	4	8	6	4 — 2 ½	1 — 5	6
1250	8	8	6	8	6	6 — 2 ½	1 — 5	8
1500	8	8	6	8	8	6 — 2 ½	1 — 5	8
2000	10	10	6	10	8	6 — 2 ½	2 — 5	8
2500	10	10	6	10	8	8 — 2 ½	2 — 5	10
3000	12	12	8	12	8	12 — 2 ½	2 — 5	10
3500	12	12	8	12	10	12 — 2 ½	3 — 5	12
4000	14	12	8	14	10	16 — 2 ½	3 — 5	12
4500	16	14	8	14	10	16 — 2 ½	3 — 5	12
5000	16	14	8	14	10	20 — 2 ½	3 — 5	12

NOTE : ACCESSORIES IS ONLY FOR REFERENCE, MAY NOT INCLUDE IN THE SCOPE OF SUPPLY!

The contents of this publication must not be regarded as binding. EBARA ENGINEERING SINGAPORE PTE. LTD. reserves the right to effect any modification it deems necessary, without prior notice.

EBARA ENGINEERING
SINGAPORE PTE. LTD.

Building Service & Industrial Company
No. 1 Tuas Link 2
Singapore 638550
Tel 65-6862-3536 Fax 65-6861-0589, 65-6863-1201
eespsales@ebara.com
https://www.ebara.com.sg

© EBARA CORPORATION. All rights reserved.